ASHIRVAD
RESEARCH FOUNDATION

"Sky-view", Plot No. 291, Nr. 17/22, Bus Stop, Sector-22
Gandhinagar-382022. Phone : 079-23221584 / 079-2322463
Mobile : 9825183865 E-mail : binal_joshi@yahoo.com

24/9/2018

To,

Venus Institute of Physiotherapy,

Bhoyan Rathod, Opposite IFFCO,

Near ONGC WSS, Adalaj Kalol Highway,

Gandhinagar, Gujarat - 382422.

Sub: Project Acceptance and Sanction Order

Dear Sir/Madam,

We are greatly privileged to offer the grant of **Rs. 5,00,000** to the Project

"Prevalence of Work-Related Musculo Skeletal Disorder And It's Association With Mental Health Among Clinical Physiotherapist"

The Project will be carried forward for the duration of **12 months** by the Principal Investigator, **Dr. Heena Shekh** and Team members, **Dr. Ankit Sinha, Dr. Krupa Suthar, Dr. Sachin Agrwal, Dr.Niral Gamit** in Venus Institute of Physiotherapy.

We would extend our continuous support throughout the implementation of the Project.

Thanking You

ASHIRVAD PARAMEDICAL INSTITUTE Ashirvad Research Foundation Reg. No. GUJ-645, F/602 Gandhinagar GANDHINAGAR

Registrar
Swarmim Startup & Innovation University
At : Boyan Rathod, Gandhinagar.

Swarnim Startup & Innovation University Bhoyan Rathod, Gandhinagar

Ragin Ravindrabhai Shah

“Work Related Musculoskeletal Disorder Among Recreational Cricket Players: - A Cross Sectional Study”

Research Project Report Submitted to

Ashirvad Research foundation,

Submitted by:

Principal Investigator: Dr. Pruti Sangani, Assistant Professor, Venus Institute Of Physiotherapy

Co investigator: Dr. Mitrangi Vaghela, Dr. Bansi Savaliya, Dr.Pinal Borsaniya, Dr.Rupal Makavana

Registrar
Swarrnim Startup & Innovation University
At : Boyan Rathod, Gandhinagar.

INDEX

Sr. No	Content
1	Introduction
2.	Review of literature
3.	Aims and objectives
4.	Methodology
5.	Results
6.	Discussion
7	Conclusion
8.	References

Registrar
Swarmim Startup & Innovation University
At : Boyan Rathod, Gandhinagar.

INTRODUCTION

Work-related injuries pose a significant burden on individuals, organizations, and society at large, with musculoskeletal disorders (MSDs) being one of the primary causes and contributors to workers' compensation claims. The lack of specific data on work-related musculoskeletal diseases in developing nations complicates efforts to identify prevalent issues and occupations at high risk, though occupations requiring heavy physical exertion, such as construction, stone work, mining, and cleaning, are likely the most vulnerable. Additionally, musculoskeletal disorders (MSDs) are defined as soft tissue disorders not resulting from sudden events, and are deemed work-related when the work environment significantly contributes to their development. [1]

Cricket is a prominent international sport played in more than 60 countries. The laws of cricket were drawn up by the London Club in 1944 formalizing a game that had been played for a hundred of years ago. [2] Cricket is regarded as a leisurely, gentlemen's game.[3] In cricket, bowlers deliver a hard ball at a high speed directly to the batsman.[4] Now cricket is played in more than sixty countries and regarded as prominent international team sport. Cricket also played in many commonwealth countries as popular sport. Cricket is the most popular team sport in Indian subcontinent that consists India, Pakistan, Afghanistan, Bangladesh, Sri Lanka. The popularity for cricket in India was started after its success in 1983 world cup in which it was the champion; this lead to a greater number of people participating in cricket. There are various clubs and centers with talented coaches to train them. Injuries are inevitable when one player is training and compete. There are numerous studies available at international level, but in India there is a lack of research in cricket.[5]

The ICC trophies won by India:

ICC Cricket World Cup - 1983

India's cricket legacy began with the 1983 ICC Cricket World Cup victory, where Kapil Dev's team triumphed against the odds, defeating Clive Lloyd's West Indies, marking India's first ICC trophy. Until then, the Indian cricket team held little significance in the sporting world, but this underdog victory transformed the perception of cricket in India. [6]

Registrar
Swarmim Startup & Innovation University
At : Boyan Rathod, Gandhinagar.

ICC Champions Trophy - 2002

The 2002 Champions Trophy stands as a unique event in ICC history, being the solitary tournament where a definitive champion wasn't determined, resulting in Sri Lanka and India being declared joint winners. This marked a significant milestone, breaking a nearly two-decade drought for India in ICC trophy victories. Sri Lanka, considered pre-tournament favourites, secured their spot in the final through dominant performances in the group stage, culminating in a convincing sevenwicket win over Ricky Ponting's formidable Australian team. Conversely, India, fielding a relatively youthful squad, earned their place in the final after a hardfought 10-run victory against South Africa. However, unforeseen rain disruptions plagued the finals, forcing two washouts and ultimately leading to both Asian cricket powerhouses sharing the trophy. [6]

ICC T20 World Cup - 2007

The inaugural ICC T20 World Cup introduced both a new competition and a fresh captain, sparking apprehension over India's performance. With MS Dhoni, then 26 years old, assuming leadership, following Rahul Dravid, Sourav Ganguly, and Sachin Tendulkar's self-exclusion from T20I cricket's premier event in 2007, the team faced the challenge with a predominantly inexperienced roster. As a result, the burden fell on Dhoni, hailing from Ranchi, to orchestrate a remarkable feat. [6]

ICC Cricket World Cup - 2011

India's 28-year wait for another ICC Cricket World Cup ended in 2011, with MS Dhoni's iconic six in the final against Sri Lanka, while Yuvraj Singh's stellar performance anchored the victorious campaign, marking a fitting farewell for cricket legends Sachin Tendulkar and Virender Sehwag. [6]

ICC Champions Trophy - 2013

The 2013 edition of the ICC Champions Trophy, India beat England in finals and MS Dhoni becomes only captain in world cricket to will all three ICC trophies. Currently the men’s Indian cricket team is ranked 1st in test cricket, 1st in one-day international and 1st in T20 (as of 26/03/2024 - ICC rankings). There is a lot of crazes for cricket in India. Many children here like or even play cricket. There is a big cricket player in every street here. People love

Registrar
Swarrmim Startup & Innovation University
At : Boyan Rathod, Gandhinagar.

cricket a lot. Cricket is not just a sport but an emotion for the children of India. There is no shortage of talent in India, there is a dangerous player in every street regarding cricket. Every child here dreams of becoming a successful cricketer and playing for his country.

Cricket, characterized by its dynamism, encompasses a plethora of abstract skills and movements. To refine these intricacies, many players prioritize maintaining peak physical fitness and strength. The game's three distinct facets (bowling, batting, and fielding) each pose unique injury risks. [7,8,9] Musculoskeletal discomfort may manifest in diverse scenarios during cricket matches, including impacts from balls or bats, swift rotational actions, sliding and diving maneuvers, collisions with fellow players, and the cumulative effects of overuse. [10,11,12,13]

Running is a common thing in cricket, whether it is batting or bowling or fielding, running has to be done by all, hence lower limb is more affected in cricket. After that, the second task is to throw the ball because all the players do field and hence upper limb injuries also occur. After that, injuries to the upper and lower trunk occur, due to twisting or overstretch of the trunk.

IMAGE 1[14**]**

As you can see in Image 1, the stance of a batsman while batting is somewhat like this, it can be differed from batsmen to batsmen. This is a normal stance of the batsman, after that the bowler bowls the ball and the batsman hits the stroke according to the ball. The posture of batsmen is different in every stroke, sometimes extra force is applied on the body or if the

Registrar
Swarmim Startup & Innovation University
At : Boyan Rathod, Gandhinagar.

body gets twisted too much than the injury can occur. And also, when the batsmen take run, he will run fast so the batsmen have chances to get injured while running. That's why batsmen suffer more injuries to their back and hips.

IMAGE 2[15**]**

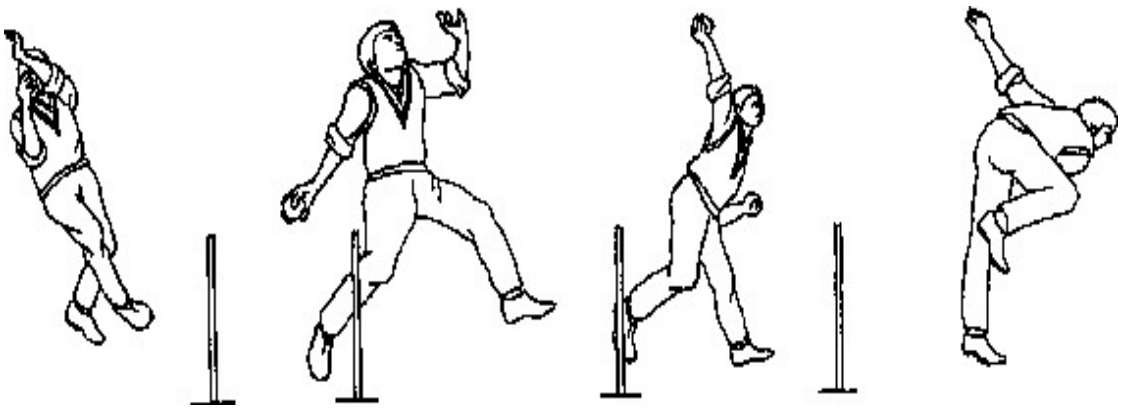

The Image 2 shows the ideal bowling action of the player. While bowling, a bowler runs, then makes a jump, rotates his arm in a circular motion and delivers the ball. And experts believe that while delivering the ball, 7 to 8 times more force is applied to the bowler's ankles/feet and the repetitive movement of the shoulder is happens while bowling. That's why bowlers suffer more ankle/feet and shoulder injuries.

IMAGE 3[16]

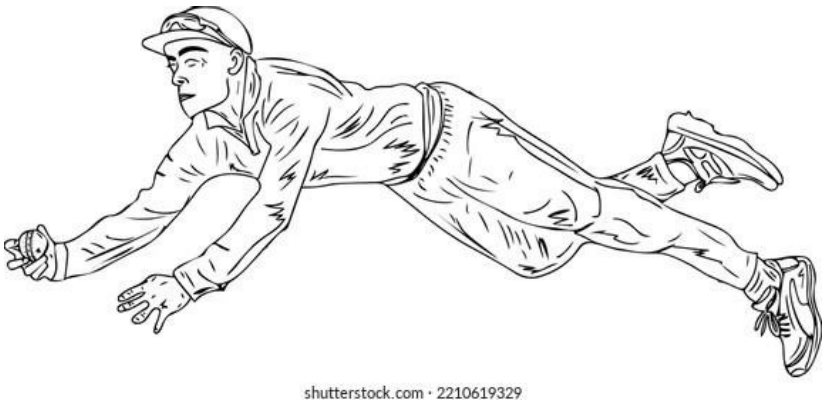

Fielding is another role in cricket. So, while doing this, a player gives extra efforts to save runs for the team. During this, his chances of getting injured are increased because he runs, slides, dives, throws and catches the ball and players even collide with each other. Therefore,

Registrar
Swarrnim Startup & Innovation University
At : Boyan Rathod, Gandhinagar.

fielders are at greater risk of hip/thigh injuries, knee injuries, low back and shoulder injuries. According to Sathya et al., 61% of players encountered musculoskeletal issues linked to cricket. Stretch et al.'s findings indicated that South African cricketers predominantly suffered lower limb injuries (50%), followed by upper limb (23%) and back/trunk injuries (23%). [17]

Musculoskeletal pain (Injury) is defined as 'A sensation of agony that inhibits the individual from participating in cricket or practice for a minimum of 24 hours. [18]

There are many studies available at domestic and international level on injuries faced by cricket players. Thus, the purpose of the study is to find the work-related musculoskeletal disorder among recreational cricket players.

REVIEW OF LITERATURE

Chandrasekhar Bodanki et al. (2020) Prevalence of cricket-related musculoskeletal pain among Indian junior club cricketers

It was an observational study conducted on male junior club cricketers in the age group of 8-16 years. Based on a self-reported questionnaire, player's physical status, training, injuries and their nature are assessed over a period of 12 months. CIPP should be implemented and strictly followed from the early stages of sports life. Pre-training warm-up and post-training cool-down should be included in their routine training. Overuse i.e. playing overtime and ignoring the pain during practice or match should be avoided. A supervised training and regular screening of players by orthopaedician or sports physician will keep them fit to play with full potential.[19]

Abdullah Munir et al. (2020) Assessment of musculoskeletal disorders among cricketers playing in domestic clubs in Lahore

The cross-sectional study was conducted from October to November 2020 in Lahore, Pakistan, and comprised male cricket players aged 10-25 years playing in four domestic clubs. Data was collected about musculoskeletal disorders experienced during the preceding 12 months using the Extended Nordic Musculoskeletal Questionnaire. Data was analyzed using SPSS 22. Out Of the 89 players with a mean age of 19.24±3.12 years, 35(39.3%) were bowlers, 26(29.2%) were batsmen, 17(19.1%) were all-rounders, and 11(12.4%) were

Registrar
Swarrmim Startup & Innovation University
At : Boyan Rathod, Gandhinagar.

wicketkeepers. The anatomical distribution of disorder was lower-back 68(76.4%), shoulder 40(44.9%), neck 39(43.8%), upper-back 37(41.6%), knees 31(34.8%), ankle/feet 29(32.6%), thighs 27(30.3%), wrist/hands 18(20.2%), and elbows 17(19.1%). There were 22(24.7%) players who had at any time seen a doctor or a physiotherapist, while 24(27%) players had a history of taking sick leave.[20]

Mohammad Rashaduzzaman et al. (2019) An experimental analysis of different point specific musculoskeletal pain among selected adolescent-club cricketers in Dhaka City

Data was collected from three clubs in Dhaka city, and the participant's age group was 10-19 years. Data was collected through oral conversations with participants and physical testing. This process was continued over six months, which repeated monthly between same subjects. 97 cricketers experienced musculoskeletal pain, where maximum reported upper limb musculoskeletal pain was 33.3% shoulder, 21.6% elbow, 27.5% wrist, and 17.6% hand pain. In contrast, 46 candidates were found in the lower limb musculoskeletal pain category containing 19.6%, 30.4%, 30.4% and 19.6% hip joint, knee joint, ankle joint and foot joint musculoskeletal pain, respectively. BMI had no significant effect on the typical upper and lower limb musculoskeletal pain. Batsmen playing for 4 sessions or more per week are the main victims of upper limb musculoskeletal pain. In contrast, bowlers and all-rounders were the main victims of lower limb musculoskeletal pain under similar workloads.[21]

Rahman, E., Akter, M. F., Haque, M. O., & Habibur Rahman, M. (2019). Common Sports Injuries among Male Cricket Players in Bangladesh

A quantitative cross- sectional study design was chosen to achieve the objectives of the study. 100 subjects were selected through convenience sampling technique from the injured male cricket player who trained in *Bangladesh Krira Shikkha Protishtan* (*BKSP*)& Bangladesh Cricket Board (BCB) by using a structural questionnaire to collect data. the vulnerable age range 21-23 was frequent injury occurring among cricket player and noticeably flexibility and overuse are the key issues to cause of injury. Health education and perform regular physical activity along with physio therapeutic exercises can prevent injury.[22]

P. Sathya et al. (2017) Prevalence of Musculoskeletal Problems in Cricket Players

Registrar
Swarmim Startup & Innovation University
At : Boyan Rathod, Gandhinagar.

A cross sectional survey was carried out on 125 club level male cricket players using Modified Nordic Musculoskeletal Questionnaire to find the prevalence of musculoskeletal problem in cricket players. This study concludes that there was 61% prevalence of musculoskeletal problems in cricket players. Lower back was the most commonly injured body part followed by ankles/feet, knees and hips/thighs. Musculoskeletal problems were more common in all-rounder's compared to batsmen and bowlers. Ankles/feet were the most commonly affected area in all-rounder's, low back area was commonly affected in bowlers and batsmen followed by other areas. This study also concludes that on the basis of type of injury, strain and sprain are the most common types of injuries in cricket players.[17]

Sumit Kumar et al. (2015) One year prevalence of musculoskeletal disorder among cricket Players in Haryana: A retrospective study

Injury data was collected from each player using modified Nordic Musculoskeletal Injury Questionnaire. To find out overall, site specific, role of play specific and type of injury specific prevalence rate of musculoskeletal injuries in cricket players**.** 50 players out of 127 was injured leading to 39% overall prevalence of injuries among cricket players. Low back, shoulder and ankle are the first three most common injuries in cricket players. Fast bowler and batsmen sustained maximum injuries among different playing role. Wicket-keeper is the least injured role in cricket.[5]

M H Noor Bhai et al. (2012) Prevalence of cricket-related musculoskeletal pain among adolescent cricketers in KwaZulu-Natal

Data were collected from five secondary schools. Subjects' participation was dependent on voluntary and parental informed consent. Child assent forms were also provided for the schoolboy cricket players to complete. Participants were required to complete a self-reported questionnaire probing the prevalence of musculoskeletal pain within the last 12 months. The probability was set at $p \leq 0.05$. . Male adolescent recreational cricket players reported a high prevalence of cricket-related musculoskeletal pain. The knee was the most common anatomical site. Parents, guardians and coaches should pay specific caution to preliminary and extrinsic factors causing musculoskeletal pain in adolescent cricketers.[23]

AIM & OBJECTIVE

Registrar
Swarmim Startup & Innovation University
At : Boyan Rathod, Gandhinagar.

• To determine work related musculoskeletal disorder among recreational cricket players.

Registrar
Swarmim Startup & Innovation University
At : Boyan Rathod, Gandhinagar.

BUDGET ESTIMATE

Category	**Year 1**
Survey and Data Collection Tools	60,000
Participant Recruitment and Compensation	95,000
Medical and Psychological Assessments	65,000
Data Analysis and Software	50,000
Travel and Logistics	50,000
Documentation and Reporting	45,000
Miscellaneous and Contingency	50,000
Publication and Dissemination	50,000
Regulatory and Compliance Fees	35,000
Total (INR)	**5,00,000**

METHODOLOGY

Study Place: Tanman Cricket Ground, Galaxy Cricket Ground, Samarpan Cricket Ground, Norada 108 Cricket Ground.

Sampling Design: Convenience sampling

Study Design: A cross-sectional survey studies.

Duration of Study: 6 months

Sample Size: 105

Registrar
Swarrmim Startup & Innovation University
At : Boyan Rathod, Gandhinagar.

Inclusion criteria:

- Male cricket players of age 19-27 years
- Playing experience of minimum 3-4 years with regular practices

Exclusion criteria:

- Recent fracture or injury.
- Any recent cardiovascular surgery.
- Any Neurological condition.
- Alter mental illness.
- Players who do not play regularly

Material required:

- Consent form
- Assessment form
- Modified Nordic Musculoskeletal Questionnaire (MNMQ)
- Pen

Consent form

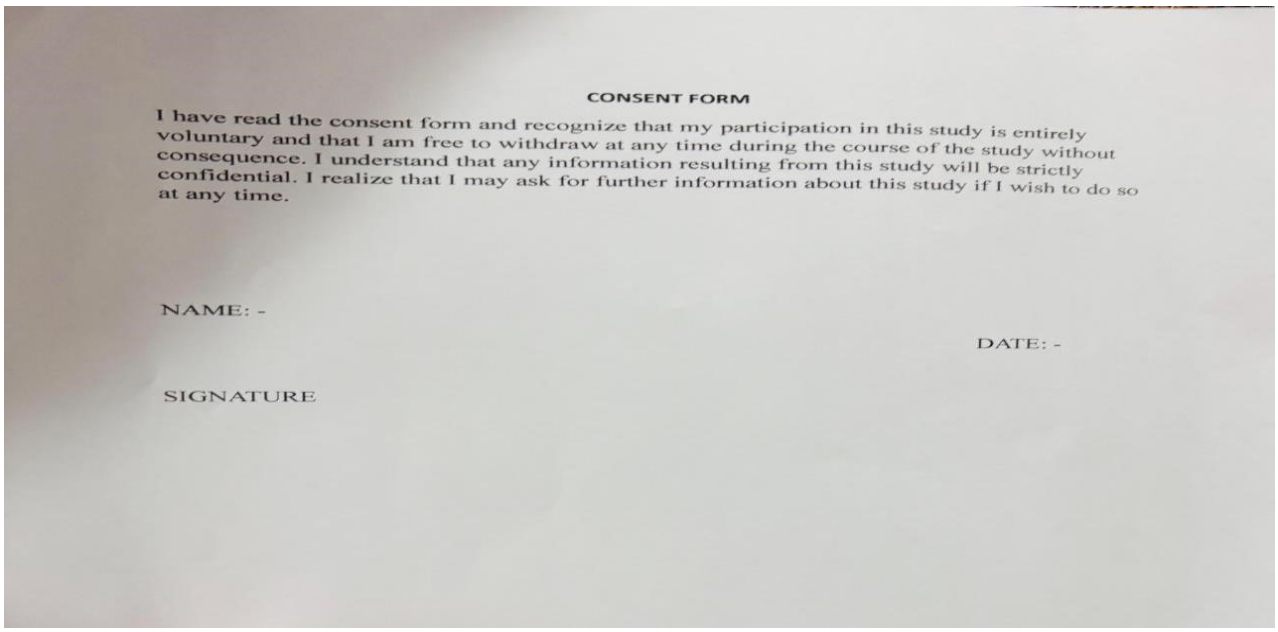

CONSENT FORM

I have read the consent form and recognize that my participation in this study is entirely voluntary and that I am free to withdraw at any time during the course of the study without consequence. I understand that any information resulting from this study will be strictly confidential. I realize that I may ask for further information about this study if I wish to do so at any time.

NAME: -

DATE: -

SIGNATURE

Registrar
Swarmim Startup & Innovation University
At : Boyan Rathod, Gandhinagar.

Outcomes measurement

Modified Nordic Musculoskeletal Questionnaire (MNMQ):

TROUBLE WITH THE LOCOMOTIVE ORGANS																
	Have you at any time during the last **12 months** had trouble in:			*To be answered only by those who have had trouble*												
				Have you at any time during the **last 12 months been prevented from doing your normal work** because of the trouble?		Have you had trouble at any time during the **last 7 days?**		Have you ever hurt your body part in an **accident**?		What is the **total length of time** that you have had trouble during the last 12 months?				Have you been **seen by a doctor** because of trouble during the last 12 months?	
										1-7 days	**8-30 days**	**More than 30 days**	**Everyday**		
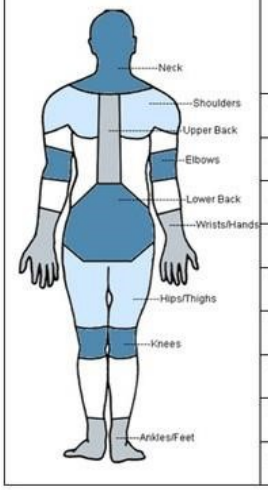	**Neck**	YES	NO	YES	NO	YES	NO	YES	NO					YES	NO
	Shoulders	YES	NO	YES	NO	YES	NO	YES	NO					YES	NO
	Elbows	YES	NO	YES	NO	YES	NO	YES	NO					YES	NO
	Wrists/Hands	YES	NO	YES	NO	YES	NO	YES	NO					YES	NO
	Upper back	YES	NO	YES	NO	YES	NO	YES	NO					YES	NO
	Low back	YES	NO	YES	NO	YES	NO	YES	NO					YES	NO
	Hips/Thighs	YES	NO	YES	NO	YES	NO	YES	NO					YES	NO
	Knees	YES	NO	YES	NO	YES	NO	YES	NO					YES	NO
	Ankles/Feet	YES	NO	YES	NO	YES	NO	YES	NO					YES	NO

Registrar
Swarrmim Startup & Innovation University
At : Boyan Rathod, Gandhinagar.

Figure 2: Pen, consent form, MNMQs

Registrar
Swarmim Startup & Innovation University
At : Boyan Rathod, Gandhinagar.

Procedure

- A sample of cricket players was taken in this survey from various cricket ground located in Ahmedabad.
- All players who meet the inclusion criteria were eligible to participate in the study.
- The data collection was done involving the questionnaire is based on MNMQs.
- Firstly, players were made aware about the purpose of the study. Each component of
- Modified Nordic Musculoskeletal Questionnaire was explained to each and every player And consent of each player was taken.
- Then, General demographic data was taken Name, age, gender, occupation, role they play in cricket from the player and asked them to recall their injuries from last one year from April 2023 to March 2024.
- Afterward, the questionnaire content six component.
- The questionnaire content binary questions and player have to fill the answers respectively.
- Then data was collected from 105 player and analyzed in simple percentage and graphs.

FLOW CHART

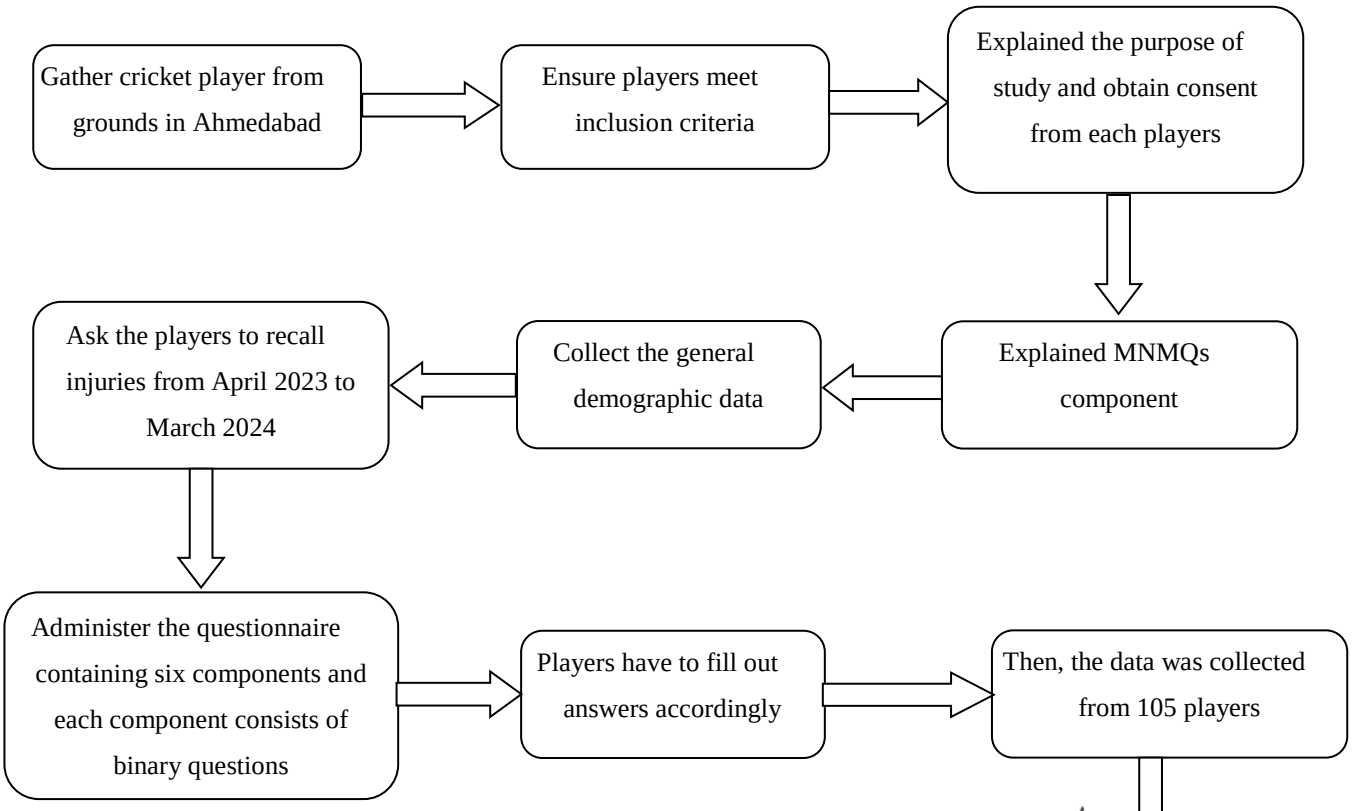

Registrar
Swarrnim Startup & Innovation University
At : Boyan Rathod, Gandhinagar.

The data was analyzed using simple percentages and graphs

RESULTS

- The analysis was done using excel.
- Total 105 player are taken for the study

GRAPH 1

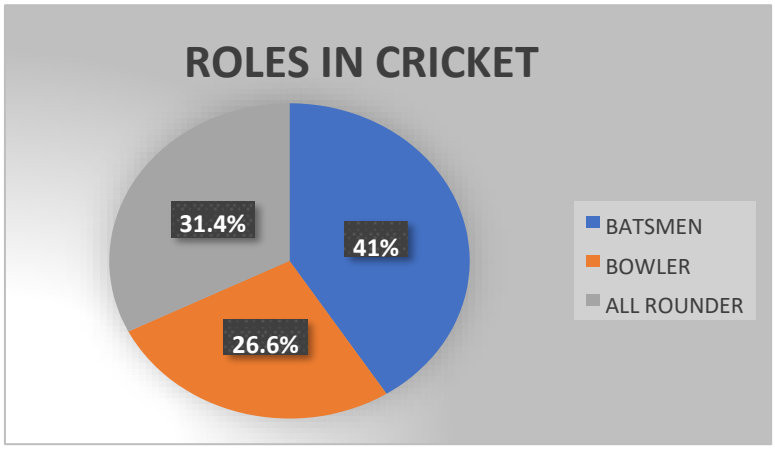

A. The above graph shows, out of 105 players 43(41%) were batsmen, 28(26.6%) were bowler, 34(31.4%) were all-rounder.

Registrar
Swarrnim Startup & Innovation University
At : Boyan Rathod, Gandhinagar.

GRAPH 2

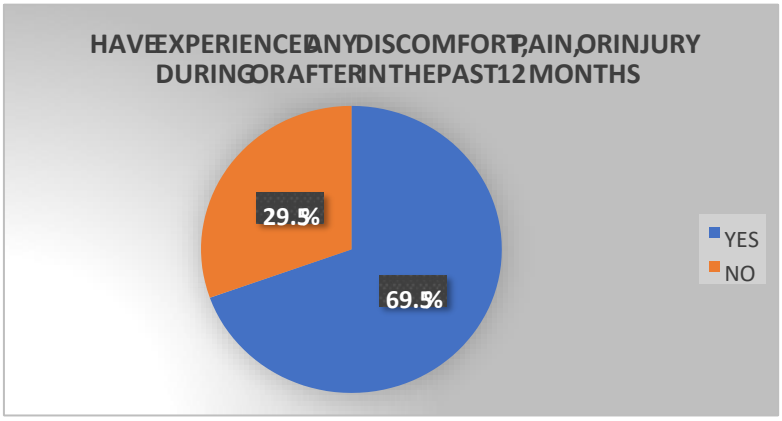

B. The above graph shows, out of 105 players, 73(69.5%) players had experienced any discomfort, pain, or injury during or after cricket activities in the past 12 months.

GRAPH 3

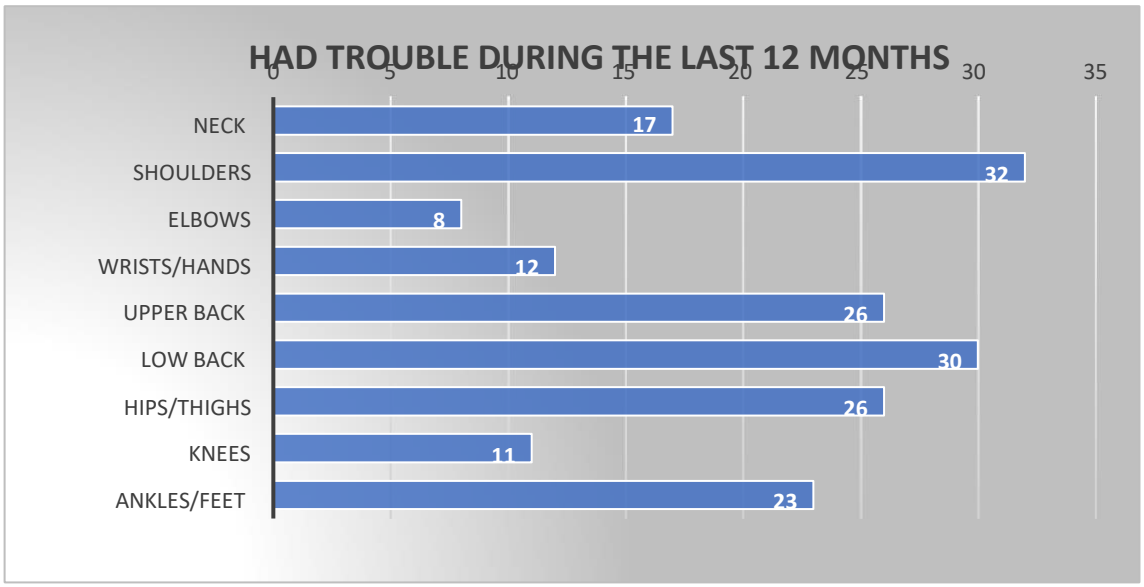

C. The above Graph show the trouble held to cricket players during the last 12 months according to anatomical site. The commonest site for pain or injury among the players is Shoulder and low back (41%) followed by Upper back and Hips/thighs (35%), Ankles/feet (31%), Neck (23%), Wrists/hands (16%), Knees (15%), Elbows (11%).

Registrar
Swarrmim Startup & Innovation University
At : Boyan Rathod, Gandhinagar.

GRAPH 4

D. The above graph shows the trouble held to Batsmen during last 12 months according to anatomical site. Out of 43 batsmen 24 (55%) experienced pain or discomfort during or after cricket in last 12 months. The commonest site for batsmen is Hips/Thighs (54%), followed by low back (37%), upper back (29%), shoulder (25%), Neck (20%), Knees and Ankles/Feet (16%), Elbow and Wrists/Hands (4%).

Registrar
Swarrnim Startup & Innovation University
At : Boyan Rathod, Gandhinagar.

GRAPH 5

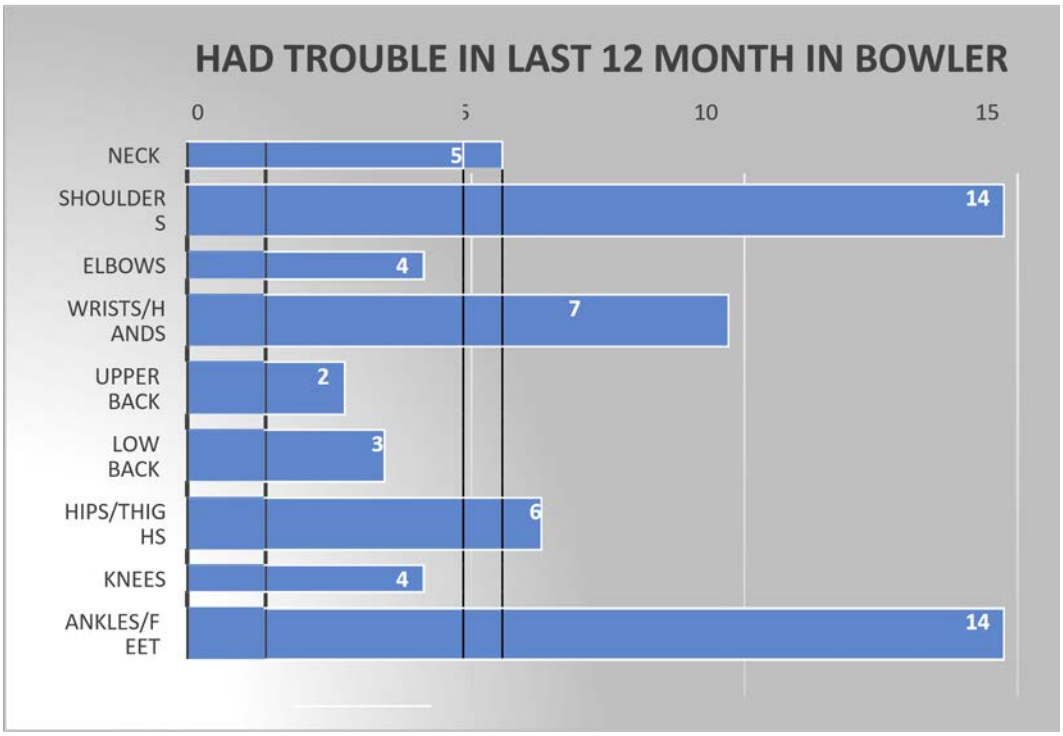

E. The above graph shows the trouble held to Bowler during last 12 months according to anatomical site. Out of 28 bowlers 23 (82%) experienced pain or discomfort during or after cricket in last 12 months. The commonest site for bowler is Shoulders and Ankles/Feet (60%) followed by Wrists/Hand (30%), Hips/Thighs (26%), Neck (21%), Elbows and Kness (17%), Low back (13%), Upper back (8%)

Registrar
Swarmim Startup & Innovation University
At : Boyan Rathod, Gandhinagar.

GRAPH 6

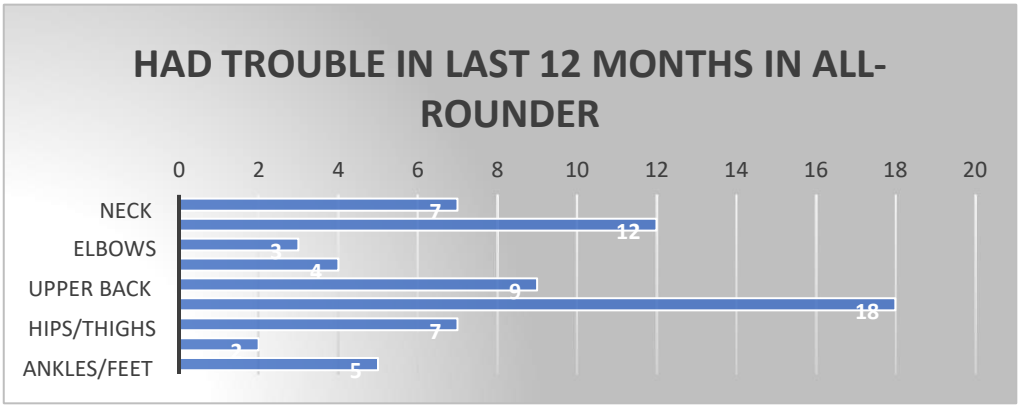

F. The above graph shows the trouble held to All-rounder during last 12 months according to anatomical site. Out of 34 all-rounder 25 (73%) experienced pain or discomfort during or after cricket in last 12 months. The commonest site for all-rounder is Low back (72%), followed by Shoulder (48%), Upper back (36%), Neck and Hips/Thighs (28%), Ankles/feet (20%), Wrists/Hands (16%), Elbows (12%), Knees (8%).

GRAPH 7

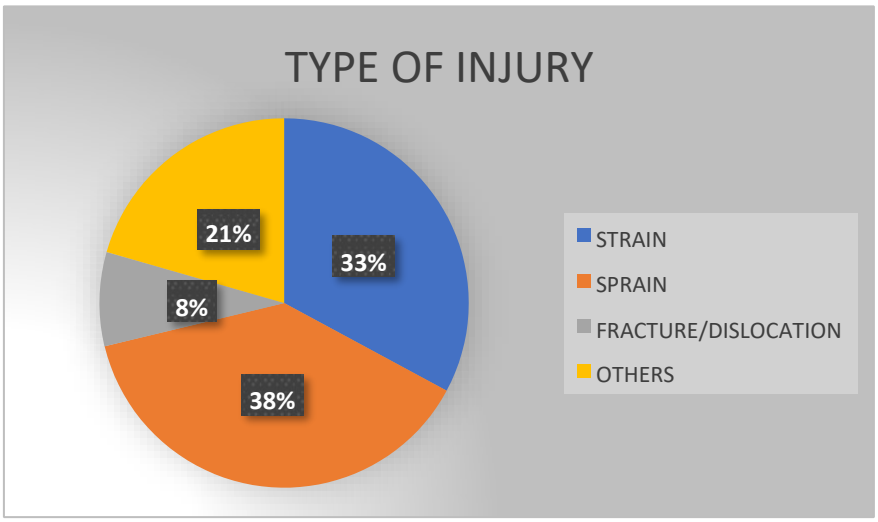

G. The above graph shows types of injuries in cricket players. Out of 105 players investigated 73 (69.5%) experienced work-related musculoskeletal problem within last 12 months. Out of 73 players 28 (38%) had Sprain, 24 (33%) had strain, 15 (21%) had other injuries and 6 (8%) had fracture/dislocation.

Registrar
Swarrnim Startup & Innovation University
At : Boyan Rathod, Gandhinagar.

DISCUSSION

The study was done on 105 recreational cricket players (males) of age group of 19-27 years with minimum experience of 3-4 years. The Aim and objective of the study was to find workrelated musculoskeletal disorder among recreational cricket player. Modified Nordic Musculoskeletal Questionnaire was used to find the work-related musculoskeletal problem in recreational cricket players in last one year. Out of 105 players 73 (69.5%) experienced work related musculoskeletal problem. According to Graph -3, the most common site of injury or pain is in shoulders and low back (41%), followed by Ankles/feet, upper back, hips/thighs. Because of repetitive movement of shoulder and trunk. Fielder throws the ball, bowler runs and deliver the ball with maximum effort so the movement of shoulder is much more that's why the risk of shoulder injuries is more on other hand repetitive hyperextension, rotation of trunk while batting or deliver the ball by bowlers.

The Graph-4 shows the prevalence of work-related musculoskeletal problem in last 12 months in Batsmen. Out of 43 batsmen 24 (55%) experienced musculoskeletal problem. Hips/thighs, low back, upper back these 4 sites are most commonly affected in batsmen because more use of trunk and lower extremities is there. That's why trunk and lower limb is most commonly affected. The Graph-5 shows the prevalence of work- related musculoskeletal problem in last 12 months in Bowler. Out of 28 bowler 23 (82%) experienced musculoskeletal problem. Shoulder, Ankles/Feet these 3 sites are most commonly affected in bowler because of repetitive movement of shoulder for delivering the ball and also when the bowler delivers the ball, the whole weight of the body came to ankles/feet. Hence shoulder, ankles/feet are most commonly affected. The Graph-6 shows the prevalence of work-related musculoskeletal problem in last 12 months in All-rounder. Out of 34 All-rounder 25 (73%) experienced musculoskeletal problem. Low back, Shoulder, Upper back, Hips/thighs these 4 are the most common site of injury or pain in all-rounder because they have to play all the roles in cricket (Batting, Bowling and Fielding). Player who prevented from doing normal work in the last 12 months due to workrelated musculoskeletal problem: The most common site for preventing from doing normal work during last 12 months are Low back and Upper back followed by Shoulder. Player who had trouble at any

Registrar
Swarrmim Startup & Innovation University
At : Boyan Rathod, Gandhinagar.

time during last 7 days: The most common site causing trouble in last 7 days are Hips/Thighs followed by Upper back and Low back. Out of 105 players only 18 (17%) players had ever hurt themselves body part in an accident. Shoulder and Ankle/feet are hurt more in an accident followed by Hips/thighs and Knees. When the players were asked about the total length of time that had trouble during the last 12 months. The most common answered was 1-7 days followed by 8-30 days and very few were for more than 30 days. The last component of the MNMQs was about the type of the Injury. As the Graph 7 shows, 28 players were affected with Sprain, 24 Players were affected with Strain and 21 players were affected with Other and Fracture/dislocation.

Chandrasekhar Bodanki et al. conducted a study on Prevalence of cricket-related musculoskeletal pain among Indian junior club cricketers and finds that CIPP should be implemented and strictly followed from the early stages of sports life. Pre-training warm-up and post-training cool-down sessions into their regular training regimen is essential. It's crucial to steer clear of overuse, such as prolonged play beyond scheduled times, and to refrain from disregarding any pain experienced during practice or matches. A supervised training and regular screening of players by orthopaedician or sports physician will keep them fit to play with full potential. [19]

P. Sathya et al. conducted a study on Prevalence of Musculoskeletal Problems in Cricket Players and finds that the findings revealed a 61% prevalence of musculoskeletal problems among cricket players. The lower back emerged as the most frequently affected area, followed by ankles/feet, knees, and hips/thighs. Musculoskeletal problems were more prevalent among all-rounders than batsmen and bowlers. Specifically, ankles/feet were frequently affected in all-rounders, while bowlers and batsmen commonly experienced issues in the low back area, alongside other regions. Furthermore, strain and sprain were identified as the predominant types of injuries among cricket players, regardless of their specific role in the game. [17] **Sumit Kumar** et al. conducted a study on One year prevalence of musculoskeletal disorder among cricket Players in Haryana: A retrospective study: - Injury data was gathered using a modified Nordic Musculoskeletal Injury Questionnaire. Frequency of musculoskeletal injuries is more among cricket players. Conditioning by coaches and early rehabilitation by physiotherapists are essential to reduce the injury rate in this population. [5]

Registrar
Swarmim Startup & Innovation University
At : Boyan Rathod, Gandhinagar.

Present study was conducted on 105 recreational cricket player and the prevalence of Musculoskeletal problem was 69.5% and shoulder and Low back (41%) were the most commonly injured body part followed by Ankles/feet, upper back, hips/thighs.

CONCLUSION

This study concludes that the work-related musculoskeletal disorder in recreational cricket players were more. Shoulders and Lower back were the most common injured body parts followed by Hips/thighs, Ankles/Feet and Knees. According to role of cricket, Bowlers were more affected than Batsmen and All-rounder. The study conclude that Hips/thighs and low back are the common site of injury in batsmen. Shoulder and Ankles/feet are the common site of injury in bowlers and Low back and shoulder were the most common site of injury in All-rounders. The study also concludes that due to the Low back Injury or pain players had affected from doing their daily activity of living in last 12 months. This research findings indicate that sprain and strains rank as the predominant injuries experienced by cricket players.

REFERENCES

- https://www.physio-pedia.com/Work-Related_Musculoskeletal_Disorders
- Tanzir-Uz-Zaman M. Common sports injuries among the injured cricket players.
- Zaman MTU. Common sports injuries among the injured cricket players. Undergraduate Dissertation. Bangladesh Health Profession Institute (BHPI),
- 2012. Assessed from www.library.crp-bangladesh.org last assessed on 30thSeptember 2015.
- Ranson C, Peirce N, Young M. Batting head injury in professional cricket: a systemic video analysis of helmet safety characteristics. Br J Sports Med. 2013; 47(10):644-48.
- Kumar, Sumit & Kaur, Jaspreet & Chaturvedi, Rekha & Girdhar, Baljeet & Singh, Varun & Punia, Sonu & Kumar, Vikash & S, Kulandaivelan. (2015).
- https://www.sportsadda.com/cricket/features/icc-trophies-won-team-indiaworld-cup-t20- champions-trophy

Registrar
Swarrnim Startup & Innovation University
At : Boyan Rathod, Gandhinagar.

- Aginsky KD, Lategan L, Stretch RA. Shoulder injuries in provincial male fast bowlers predisposing factors. S Afr J Sports Med 2004;16(1):25-28.
- Myers P, O'Brien S. Cricket: Injuries, Rehabilitation and Training. London:
- Lippincott Williams & Wilkins, 2001:124-136.
- Petersen CJ, Pyne DB, Dawson BT, Kellet AD, Portus MR. Comparison training and game demands of national level cricketers. J Strength Cond Res 2011;25(5):1306-1311.
- Stretch RA. Cricket injuries: a longitudinal study of the nature of injuries to South African cricketers. Br J Sports Med 2003; 37:250-253.
- Giles K, Musa I. A survey of glenohumeral joint rotational range and nonspecific shoulder pain in elite cricketers. PhysTher Sport 2008;9(3):109-116.
- Milsom NM. Barnard JG, Stretch RA. Seasonal incidence and nature of cricket injuries among elite South African schoolboy cricketers. S Afr J Sports Med 2007;19(3):80-84.
- Stretch RA. The incidence and nature of injuries in schoolboy cricketers. S Afr Med J00201995; 85:1182-1184.
- https://images.app.goo.gl/uvPmpVCJig7ktnGK7
- https://images.app.goo.gl/T6LzgEFfpiGXRB9Z7
- https://images.app.goo.gl/FtaNKPgRrYttUVAy7
- Sathya P, Parekh RN. Prevalence of Musculoskeletal Problems in Cricket Players. Int J Health Sci Res 2017; 7: 210-5.
- Van Heerden HJ. Pre-participation evaluation and identification of aetiological risk factors in epidemiology of sports injuries among youths. Thesis: Doctor of Philosophy. Pretoria: University of Pretoria, 1996.
- Bodanki C, Krishna YH, Badam VK, Harsha TSS, Reddy AVG. Prevalence of cricket-related musculoskeletal pain among Indian junior club cricketers. Int J Res Orthop 2020; 6:744-7.
- Munir A, Akhtar M, Khalid A, Khan HF, Kiran F, Bahar G. Assessment of musculoskeletal disorders among cricketers playing in domestic clubs of Lahore. J Pak Med Assoc. 2022 May;72(5):878-881. doi: 10.47391/JPMA.2338. PMID: 35713048.

Registrar
Swarrnim Startup & Innovation University
At : Boyan Rathod, Gandhinagar.

- Rashaduzzaman, Md & Kamrujjaman, Mohammad & Islam, Md. Ariful & Ahmed, Sharmin & Salauddin, Al. (2019). An experimental analysis of different point specific musculoskeletal pain among selected adolescent-club cricketers in Dhaka City The list of abbreviations. European Journal of Clinical and Experimental Medicine. 17. 10.15584/ejcem.2019.4.4.
- Rahman, E. ., Akter, M. F. ., Haque, M. O. ., & Habibur Rahman, M. . (2019).
- Common Sports Injuries among Male Cricket Players in Bangladesh. *Journal of*
- *Current Medical Research and Opinion*, *2*(11), 331–333. https://doi.org/10.15520/jcmro.v2i11.229
- Noorbhai MH, Essack FM, Thwala SN, Ellapenetal TJ. Prevalence of cricketrelated musculoskeletal pain among adolescent cricketers in KwaZulu-Natal.
- SAJSM. 2012; 24:1.

Registrar
Swarmim Startup & Innovation University
At : Boyan Rathod, Gandhinagar.

Registrar
Swarmim Startup & Innovation University
At : Boyan Rathod, Gandhinagar.

SWARRNIM
STARTUP & INNOVATION
UNIVERSITY
WHERE IDEAS COME ALIVE
INDIA'S FIRST UNIVERSITY FOR STARTUP

Sr. No. swarrnim/RO/Utilization/2020/13

Date: 20/12/2020

Statement of Expenditure/Utilization certificate

This is to certify that the research project sanctioned to **Dr. Heena Shekh, Venus Institute Of Physiotherapy, Swarrnim Startup and Innovation University, Gandhinagar, Gujarat,** in the academic year 2019-20 has been utilized as per the following details:

Title of Project	Amount Sanctioned in (Rs)	Amount disbursed in (Rs)	Actual Expenditure in (Rs)
		2019-2020	
Prevalence of work-related musculoskeletal disorder and its association with mental health among clinical physiotherapists	500000	500000	500000

SWARRNIM STARTUP & INNOVATION UNIVERSITY ACCOUNT SECTION

Accounts/Finance officer

Swarrnim Startup and Innovation University

Emcure

Date: 13/07/2020

To,
Swarrnim Science colleage,
Bhoyan Rathod, Opposite IFFCO,
Near ONGC WSS, Adalaj Kalol Highway,
Gandhinagar, Gujarat - 382422.

Subject: Project Sanction Letter for "Method Development And Validation Of Dolutegravir, Lamivudine And Tenofovir Alafenamide Fumarate In Tablet Dosage Form By Rp-Hplc"

Dear Sir /Madam

We are pleased to inform you that your proposal for the "**Method Development And Validation Of Dolutegravir, Lamivudine And Tenofovir Alafenamide Fumarate In Tablet Dosage Form By Rp-Hplc**" has been officially sanctioned. After a thorough review, we have concluded that this project aligns with our strategic objectives and holds significant potential for advancement in research.

Project Details:

- **Project Title:** Method Development And Validation Of Dolutegravir, Lamivudine And Tenofovir Alafenamide Fumarate In Tablet Dosage Form By Rp-Hplc
- **Project Duration:** 12 months
- **Project Budget:** 758000 Rs.
- **Principal Investigator:** Dr. Amita Mishra
- **Team Members:** Mittal Makwana, Supriya Tiwari,Priyanka Shrimali,Mitesh Prajapati, Nikita Shah

This sanction grants you the authority to commence work on the project as per the outlined plan. We expect regular updates on progress and adherence to the approved budget and timeline.

Note: Payment will be released in parts per the project's progress. The project leader must submit progress reports regularly and a final project completion report at the end. Additional allowance can be considerable as per T&C.

We look forward to the successful execution of the Project and its contributions to our shared goals.

Best regards,

Signature

Emcure Pharmaceuticals Ltd

EMCURE PHARMACEUTICALS LTD GANDHINAGAR

Registrar
Swarrnim Startup & Innovation University
At : Boyan Rathod, Gandhinagar.

Swarrnim Startup & Innovation University Bhoyan Rathod, Gandhinagar

Ragin Ravindrabhai Shah

METHOD DEVELOPMENT AND VALIDATION OF DOLUTEGRAVIR, LAMIVUDINE AND TENOFOVIR ALAFENAMIDE FUMARATE IN TABLET DOSAGE FORM BY RP-HPLC

Research Project Report Submitted to

Emcure Pharmaceuticals Ltd.

Submitted by:

Principal Investigator: Dr. Amita Mishra, Assistant Professor, Swarrnim Science college

Co investigator: Mittal Makwana, Supriya Tiwari, Priyanka Shrimali, Mitesh Prajapati, Nikita Shah

INDEX

INDEX 2

ABSTRACT 1

ABBREVIATIONS 2

1 11.1 11.2 12 232.1 232.2 283 404 414.1 414.2 414.3 424.4 434.5 464.6 475 505.1 505.2 565.3 605.4 635.5 785.6 796 797 84

ABSTRACT

A simple and precise and rapid assay method was developed for the assay study of Dolutegravir, Lamivudine and Tenofovir AF in tablet dosage form. Method validation was done by RP-HPLC method. For that stationary phase the Waters X-Bridge, 150 x 4.6 mm, 5 µm coloumn was used. The separation was achieved using gradient mobile phase, mobile phase-A Water:TFA (1000:1%v/v) and Water:Acetonitrile:TFA (200:800:1%v/v) at flowrate of 1 mL/min. UV detection at 260 nm for Dolutegravir, Lamivudine and Tenofovir AF. The retention time was found to be About 4.5 minutes for Lamivudine,about 16 minutes for Tenofovir AF about 21 minutes for Dolutegravir. The method was linear in the range of 26.17-78.50 µg/mL for Dolutegravir and 150-450 µg/mL for Lamivudine and 14.00-42.00 µg/Ml for Tenofovir AF. The described method was validated with respect to system suitability, specificity, linearity, accuracy, precision and robustness. Result of each parameter was met with its acceptance criteria. So, the assay method developed and validated for simultaneous estimation of Dolutegravir, Lamivudine and Tenofovir AF in tablet dosage form by RP-HPLC method.

Key words: Dolutegravir, Lamivudine, Tenofovir AF, Assay, RP-HPLC, Validation.

1 INTRODUCTION[1-4]

1.1 Introduction to Dolutegravir, Lamivudine and Tenofovir Alafenamide Fumarate tablets[1]

Dolutegravir, lamivudine and tenofovir alafenamide fumarate tablets, a combination of dolutegravir (integrase strand transfer inhibitor [INSTI]), lamivudine, and tenofovir alafenamide fumarate (both nucleoside reverse transcriptase inhibitors), is indicated as a complete regimen for the treatment of HIV-1 infection in adults and pediatric patients weighing at least 40 kg.

1.2 Introduction to HIV-1[2]

HIV-1 is the most common type of HIV (Human Immunodeficiency Virus). The virus attacks your body's immune system by destroying CD4 cells, which help your body fight infections. This can lead to AIDS (Acquired Immuno Deficiency Syndrome).

Symptoms[3]

- Fever
- Headache
- Enlarged lymph nodes
- Lymph nodes that remain enlarged for more than three months
- Lack of energy
- Weight loss
- Frequent fevers and sweats
- Persistent or frequent yeast infections (oral or vaginal)
- Persistent skin rashes or flaky skin
- Pelvic inflammatory disease that does not respond to treatment
- Short-term memory loss
- One or more infections (opportunistic infections) related to having a diminished immune system, such as tuberculosis and certain types of pneumonia

1.2.1 Classification of Drugs used in HIV Treatment[4]

1) Non nucleoside reverse transciptase inhibitors(NNRTIs):

- Abacavir, Emtricitabine, Lamivudine, Tenofovir alafenamide fumarate, Tenofovir disoproxil fumarate

2) Nucleoside reverse transciptase inhibitors(NRTIs):

- Doravirine, Efavirenz, Etravirenz, Nevirapine, Rilpivirine

3) Protease inhibitors (PIs):

- Atazanavir, Ritonavir

4) Fusion inhibitors:

- Enfuvirtide

5) CCR5 antagonists:

- Maraviroc

6) Integrase strand transfer inhobitors(INSTIS):

- Bictegravir, Cabotegravir, Rilpivirine, Elvitegravir, Dolutegravir, Raltegravir

7) Post-attachment inhibitors:

- Ibalizumab-uiyk

1.2.2 Analytical method validation parameters[35]

1.2.2.1 Specificity

"Specificity is the ability to assess unequivocally the analyte in the presence of components which may be expected to be present. Typically, these might include impurities, degradants, matrix, etc. Lack of specificity of an individual analytical procedure may be compensated by other supporting analytical procedures." Degradants, matrix, etc. Lack of specificity of an individual analytical procedure may be compensated by other supporting analytical procedures. Specificity has the following implications:

Identification Purity test

Assay (content or potency)

1.2.2.2 Accuracy

The accuracy of an analytical procedure expresses the closeness of agreement between the value which is accepted either as a conventional true value or an accepted reference value and the value found. This is sometimes describing trueness. The ICH documents recommended that accuracy should be determine using a minimum of 9 determinations over a minimum of 3 concentration levels covering the specified range (e.g., 3 concentrations/3 replicates each of the total analytical procedure)

1.2.2.3 Precision

The precision of an analytical procedure expresses the closeness of agreement (degree of scatter) between a series of measurements obtained from multiple sampling of the same homogeneous sample under the prescribed conditions.

Precision might be considered at three levels:

1 Repeatability,

2 Intermediate precision and

3 Reproducibility

Precision should be investigated using homogeneous, pure samples. In any case, if it is not possible to obtain a homogeneous sample it may be investigated using artificially prepared samples or a sample solution. The ICH documents recommend that repeatability should be determine using a minimum of 9 determinations covering the specified range for the procedure.

1. **Repeatability**

"Repeatability expresses the precision under the same operating conditions over a short interval of time. Repeatability is also termed intra-assay precision."

2. **Intermediate precision**

"Intermediate precision expresses within-laboratories variations: different days, different equipment, different analysts, etc."

3. **Reproducibility**

"Reproducibility expresses the precision between laboratories (collaborative studies, usually applied to standardization of methodology). Precision between different samples can be compared with relative standard deviation." The value of RSD should be less than 2 %.

1.2.2.4 Detection limit

The detection limit of an individual analytical procedure is the lowest amount of analyte in a sample which can be detected but not necessarily quantitated as an exact value.

1.2.2.5 Quantitation limit

"The quantitation limit of an individual analytical procedure is the lowest amount of analyte in a sample which can be quantitatively determined with suitable precision and accuracy. The quantitation limit is a parameter of quantitative assays for low levels of compounds in sample matrices, and is used particularly for the determination of impurities and/or degradation products."

1.2.2.6 Linearity

"The linearity of an analytical procedure is its ability (within a given range) to obtain test results which are directly proportional to the concentration (amount) of analyte in the sample." ICH recommends that for the establishment of linearity a minimum of 5 concentrations normally used.

1.2.2.7 Range

“The range of an analytical procedure is the interval between the upper and lower concentration (amounts) of analyte in the sample (including these concentrations) for which it has been demonstrated that the analytical procedure has a suitable evel of precision, accuracy and linearity.”

1.2.2.8 Robustness

The robustness is an analytical procedure which is a measurement of its capacity to remain unaffected by small, but deliberate variations in method parameters and provides an indication of its reliability during normal usage.Method it should demonstrate the reliability of an analysis with respect to consider variations in method parameters.

In case of liquid chromatography, examples of typical variations are:

- Changes of pH in a mobile phase,
- Effect of variations in mobile phase composition,
- Use of the different columns (from different lots and/or suppliers),
- Changes in the temperature, flow rate.

1.2.2.9 System suitability testing

The system suitability testing is an integral part of analytical procedures. In to this method parameter such as theoretical plate count, tailing factors, resolution and reproducibility are determining and compared against the specifications set for the method.

2 Literature review

2.1 Official methods

Table 2.1: Official methods of Dolutegravir

Sr.no	Drug's Name	Method and Description	Ref
1	Dolutegravir Sodium	**LC METHOD:** **Stationary phase:** Stainless steel column(25 cm x 4.6 mm, 5 µm) (packed with phenyl group bonded to porous silica such as Kinetex Biphenyl) **Mobile phase:** orthophosphoric acid:water:methanol (60:20:20) v/v/v **Wavelength:**254 nm **Flow Rate:**1.0 mL/min	47
2	Dolutegravir Tablets	**LC METHOD:** **Stationary phase:** Stainless steel column(15 cm x 4.6 mm, 5µm) (packed with octadecylsilane bonded to porous silica such as KinetexC18) **Mobile phase:** 0.1% w/v of orthophosphoric acid: Acetonitrile (65:35) v/v **Wavelength:**258 nm **Flow Rate:** 1.2 mL/min	48

Table 2.2 Official methods Lamivudine

Sr.no	Drug's Name	Method and Description	Ref
1	Lamivudine	**LC METHOD:** **Stationary phase:** Stainless steel column (15 cm x 4.6 mm,3 µm) (packed with octadecylsilane bonded to porous silica) **Mobile phase:** Methanol:0.19%ammonium acetate (5:95) v/v adjusted to pH 3.8 with Glacial acetic acid **Wavelength:**277 nm **Flow Rate:** 1.0 mL/min	49
2	Lamivudine Oral Solution	**LC METHOD:** **Stationary phase:** Stainless steel column (15 cm x 4.6 mm,5 µm) (packed with octadecylsilane chemically bonded to porous silica) **Mobile phase:** Water: methanol (80:20)v/v **Wavelength:**270 nm **Flow Rate:** 1.0 mL/min	50
3	Lamivudine Tablets	**LC METHOD:** **Stationary phase:** Stainless steel column (15 cm x 4.6 mm, 5 µm) (packed with octadecylsilane chemically bonded to porous silica) **Mobile phase:**Methanol:Ammonium acetate buffer(5:95) v/v,adjusted to pH 3 with glacial acetic acid **Wavelength:**270 nm **Flow Rate:** 1.5 mL/min	51

Table 2.3 Official methods of Tenofovir Alafenamide

Sr.no	Drug	Method and Description	Ref
1	Tenofovir Alafenamide Fumarate	**LC METHOD:** **Stationary phase:** Stainless steel column (25 cm x 4.6 mm, 5 μm) (packed with phenyl group bonded to porous silica such as X-Bridge Phenyl) **Mobile phase:** Buffer (solution prepared by dissolving 3.4 g of tetrabutyl Ammonium hydrogen sulphate in 1000 mL ofwater and add 5 mL of triethylamine, adjusted to pH 2.0 with orthophosphoric acid): acetonitrile:methanol:tetrahydrofuran (85:5:5:5) v/v/v/v **Wavelength:**260 nm **Flow Rate:** 1.5 mL/min	52
2	Tenofovir Alafenamide Tablets	**LC METHOD:** **Stationary phase:** Stainless steel column (25 cm x 4.6 mm,5 μm) (packed with, packed with octadecylsilane chemically bonded to porous silica) **Mobile phase:** (a) Ammonium acetate solution: solvent mixture(tetrahydrofuran:	53

		acetonitrile-70:30 v/v)(99:1)v/v (b) Ammonium acetate solution: solvent mixture(tetrahydrofuran: acetonitrile-50:50 v/v)(50:50)v/v **Time A B** **(min) (%) (%)** **0 70 30** **5 70 30** **8 65 35** **15 60 40** **20 60 40** **25 70 30** **35 70 30** **Wavelength:**260 nm **Flow Rate:** 0.8 mL/min	

Table 2.4 Official methods for Binary Combination of Dolutegravir, Lamivudine and Tenofovir alafenamide

Sr.no	Drug	Method and Description	Ref

1	Lamivudine and Tenofovir Tablets	**LC METHOD:** **Stationary phase:** stainless steel column(15 cm X 4.6 mm, 5 μm) (packed with phenyl group bonded to porous silica) **Mobile phase:** Phosphate buffer(pH adjusted with 1 mL of orthophosphoric acid) :acetonitrile(50:50) v/v **Wavelength:**260 nm **Flow Rate:** 1.0 mL/min	54

2.2 Reported selected Literature Review methods

Table 2.5: Reported Method of Dolutegravir

Sr.no	Title	Method and Description	Ref
1	Development and validation of HPLC and HPTLC Method for Dolutegravir in bulk and Tablet Dosage Form	**HPLC METHOD:** **Stationary phase:** C_{18} column **Mobile phase:** Acetonitile:phosphate Buffer(pH 7.0) in the ratio of (90:10) v/v **Wavelength:**261 nm **Retention time:** 2.8±0.1 min **Flow Rate:** 1.0 mL/Min **HPTLC METHOD** **Mobile phase:** Toluene:methanol:formic acid **Wavelength:**334 nm **Rf value**: 0.496 ± 0.0055	55
2	Development and validation of RP-HPLC Method for Dolutegravir in bulk and Tablet Dosage Form	**HPLC METHOD:** **Stationary phase:** IntersilC-18, ODS-3 **(**4.6 mm ×250 mm, 5µm) **Mobile phase:** Phosphate buffer (pH 3.6):Acenonitrile (40:60) v/v **Wavelength:**258 nm **Flow Rate**: 1.0 mL/min **Retention time:** 4.833 min	56

3	Development and validation of RP-HPLC Method for Dolutegravir in bulk and Tablet Dosage Form	**HPLC METHOD:** **Stationary phase:** Zorbas SB-Aq (250 mm x 4.6 mm,5µ) **Mobile phase:** 0.1% Perchloric acid:Acetonitrile (60:40) v/v **Flow Rate:** 1.0 mL/min **Wavelength:**259 nm **Retention time:** 3.8 min	57
4	HPLC Method for the Quantitative Estimation of Dolutegravir Sodium in Bulk and Pharmaceutical Dosage	**HPLC METHOD:** **Stationary phase:** ODS C_{18} column (150 mm × 4.6 mm, 5 µ) **Mobile phase:**Acetonitil:Water (pH 7.5) in the ratio of (80:20) v/v **Wavelength:**260 nm **Retention time:3.0**±0.1 min **Flow Rate:** 1.0 mL/min	58

Table 2.6 Reported Method of Lamivudine

Sr.no	Title	Method and Description	Ref
1	Assay method Development and Validation of Lamivudine In it's Formulation by HPLC	**HPLC METHOD:** **Stationary phase:** C-08-04 (150 mm x 4.60 mm, 5µm) column **Mobile phase:** Acetonitrile: phosphate buffer (65:35) v/v **Wavelength:** 274 nm **Flow Rate**:1.5 mL/min **Retention Time**:2.643 min	59
2	Development and validation of RP-HPLC method for estimation of Lamivudine in Bulk and in Tablet dosage form	**HPLC METHOD:** **Stationary phase:** phenomenex® 18 (250 mm X 4.6 mm, 4 µm) **Mobile phase:** Water:methanol (60:40) v/v **Wavelength:** 271 nm	60

		Flow Rate:1.0 mL/min **Retention Time**:Lamivudine: 3.0 min	
3	Method development for the estimation of Lamivudine in pure and Formulation by RP-HPLC method	**HPLC METHOD:** **Stationary phase:** Kromasil C-18 column **Mobile phase:** Methanol:1% Orthophosphoric acid: Acetonitrile (30:30:40) v/v (pH-4.8) **Wavelength:** 245 nm **Flow Rate**:1.0 mL/min **Retention Time** :2.790 min	61
4	Development and validation of RP-HPLC method for estimation of Lamivudine from pharmaceutical Preparation	**HPLC METHOD:** **Stationary phase:** XTERRA C18 (4.6 mm X 150 mm) **Mobile phase:** Methano:water (50:50) v/v **Wavelength:** 270 nm **Flow Rate**:0.6 mL/min **Retention Time**:3.05 min	62
5	Development and validation of analytical method for the estimation of lamivudine in rabbit plasma	**HPLC METHOD:** **Stationary phase:** Hypersil BDS C-18 column (250 mm × 4.6 mm, 5 μm) **Mobile phase:** 0.25% Triethylamine buffer (pH 3.0): acetonitrile (70:30) v/v **Wavelength:** 256 nm **Flow Rate**:1.0 mL/min **Retention Time**:10.86 min	63

Table 2.7: Reported Method of Tenofovir

Sr.no	Title	Method and Description	Ref

1	Stability indicating RP-HPLC method for determination of Tenofovir on pharmaceutical dosage form	**HPLC METHOD:** **Stationary phase:** kromasil C18 (100 mm × 4.6 mm, 5 µ) **Mobile phase:** Methanol: Potassium dihydrogen orthophosphate buffer (30:70) v/v **Wavelength:** 260 nm **Flow Rate**:1.0 mL/min **Retention Time**7.33 min	64
2	Development and validation of quality by design based RP-HPLC method for determination of tenofovir alafenamide fumarate from bulk drug and pharmaceutical dosage form and its application to forced degradation studies	**HPLC METHOD:** **Stationary phase:** Inertsil C18 column **Mobile phase:**Acetonitrile:ammonium formate buffer of pH 5 (40: 60) v/v **Wavelength:** 261 nm **Flow Rate**:1.0 mL/min	65

Table 2.8 Reported Method for Binary Combination of Dolutegravir, Lamivudine and Tenofovir

Sr.no	Title	Method and Description	Ref
1	A Novel UPLC-PDA Stability Indicating Method Development and Validation for the Simultaneous Estimation of Lamivudine and Dolutegravir in Bulk and Its Tablets	**UPLC METHOD:** **Stationary phase:** BEH Shield RP18 (2.1 mm X 100 mm X 1.7 mm) **Mobile phase:** Orthophosphoric acid:methanol (30:70) v/v **Wavelength:**258 nm	66

		Flow Rate: 0.5 mL/min **Retention time:** Lamivudine-0.8 min Dolutegravir-2.78 min	
2	An effective stability indicating RP HPLC method for simultaneous Estimation of Lamivudine and Dolutegravir in Bulk and their Tablet dosage forms	**HPLC METHOD:** **Stationary phase:** Xbridge Phenyl (250 mm × 4.6 mm, 5 µ) column **Mobile phase:** Methanol: buffer (0.1% v/v trifluoroacetic acid in water) (85:15) v/v **Wavelength:** 258 nm Flow Rate: 0.8 mL/min **Retention Time:** Lamivudine-3.4 min Dolutegravir-5.0 min	67
3	Development and validation of analytical method for the estimation of Lamivudine and Dolutegravir sodium in dosage form	**HPLC METHOD:** **Stationary phase:** Waters C18 column (150 mm × 4.6 mm, 5µ) **Mobile phase:** A) Buffer (pH adjusted to 3.0 using orthophosphoric acid): acetonitrile :methanol (55:35:10) v/v/v B) Water (pH adjusted to 3.3 with orthophosphoric acid):acetonitrile (58:42) v/v **Wavelength:** 260 nm **Flow Rate:**1.1mL/min	68

4	Stability indicating RP HPLC method for simultaneous Quantitation of Lamivudine and Dolutegravir in Bulk and their Tablet dosage forms	**HPLC METHOD:** **Stationary phase:** Inertsil ODS 3V (250 mm × 4.6 mm, 5 µm) column **Mobile phase:** Phosphate buffer(pH-3):acetonitrile and methanol (55:20:30) v/v/v **Wavelength:** 257 nm **Flow Rate:**1.0 mL/min **Retention Time:** Lamivudine-6.36 min Dolutegravir-2.16 min	69
5	RP-UHPLC Method Development and Validation for Simultaneous Estimation of Tenofovir and Dolutegravir in Bulk and Pharmaceutical Dosage Form	**RP-UHPLC Method:** **Stationary phase:** **Phenomenex** C18 (50 mm x 2.1 mm, 1.7 µm) **Mobile phase:** Acetonitrile: Methanol **(**60:20)v/v **Wavelength:** 265 nm **Flow Rate:** 0.5mL/min **Retention Time:** Lamivudine- 3.823 min Dolutegravir- 1.967	70

Table 2.9 Reported Method of Tertiary Combination of Dolutegravir, Lamivudine and Tenofovir

Sr.no	Title	Method and Description	Ref
1	Development and validation of stability-indicating HPLC method for simeltaneous determination of Lamivudine, Tenofovir,	**HPLC METHOD:** **Stationary phase:** Inertsil ODS-3V C18 (250 mm × 4.6 mm, 5µ) **Mobile phase:** A)10 ml orthophosphoric acid in 1000 ml of acetonitrile	71

	and Dolutegravir in bulk and their tablet dosage form	B)Water:methanol in the ratio (30:70) v/v Time (min) M.P (A) M.P (B) 0 90 10 2.5 85 15 3.5 60 40 7.0 40 60 9.0 30 70 10.0 30 70 12.0 90 10 18.0 90 10 **Wavelength:** 260 nm **Flow Rate:**1.0mL/min **Retention Time:** **Dolutegravir:** 11.5mins, **Lamivudine:**2.8 mins **Tenofovir:**5.2min	

2	Development and Validation for the Simultaneous Estimation of Lamivudine, Tenofovir Disproxil and Dolutegravir In Drug Product by RP-HPLC	**HPLC METHOD:** **Stationary phase**: Luna C8 (150 mm x 4.6 mm) **Mobile phase:** 0.1%v/v Triflouro acetic acid in water:Acetonitrile **Wavelength:** 260 nm **Flow Rate:**1.0mL/min **Retention Time:** Lamivudine- 2.023 min Dolutegravir- 5.330 min Tenofovir Disoproxil Fumerate: 7.673 min	72
3	A new Stability-indicating UHPLC for the	**UHPLC METHOD:**	73
	Simultaneous determination of a combination of Anti-viral drugs: Dolutegravir sodium, lamivudine and tenofovir disoproxil Fumarate	**Stationary phase**: Zorbax SB-C18 column (100 mm × 4.60 mm, 3.5µ) **Mobile phase:** Phosphate buffer(pH-3.0):Acetonitrile (62:32) v/v **Wavelength:** 260 nm **Flow Rate:**1.0ml/min **Retention Time:** Lamivudine- 2.023 min Dolutegravir-5.330 min Tenofovir Disoproxil Fumerate: 7.673 min	
4	Development and Validation of RP-HPLC Method for the	**HPLC METHOD** **Stationary phase:** Agilent C18 (250 × 4.6 mm, 5 µm)	74

	Simultaneous Estimation of Lamivudine, Tenofovir Alafenamide and Dolutegravir Bulk and their Combined Dosage Form	column **Mobile phase:** 0.05M phosphate buffer pH 6.2: acetonitrile(60:40) v/v **Wavelength:** 260 nm **Flow Rate:**1.0 mL/min **Retention Time:** Lamivudine- 3.09 min Dolutegravir- 9.61 min Tenofovir Disoproxil Fumerate: 6.19 min	
5	Stability Indicating Technique And Validation For Dolutegravir,	**UPLC METHOD:** **Stationary phase**: Waters X-Bridge C8 (100 mm x 3.0 mm, 3.5µm).	75

	Lamivudine and Tenofovir Disoproxil Fumarate By UPLC	**Mobile phase:** Acetonitrile:0.1% formic acid in the ratio of (80:20) v/v **Wavelength:** 260 nm **Flow Rate:** 0.5 mL/min **Retention Time:** Lamivudine- 0.879 min Dolutegravir-5.330 min Tenofovir Disoproxil Fumerate: 0.607 min	
6	The Validation of a Simple, Robust, Stability-Indicating RP-HPLC Method for the Simultaneous Detection	**HPLC METHOD** **Stationary phase:** Kinetex® C18 (250 mm × 4.6 mm) column **Mobile phase:**	76

	of Lamivudine, Tenofovir Disoproxil Fumarate, and Dolutegravir Sodium in Bulk Material and Pharmaceutical Formulations	MethanoL:water with 1 mL orthophosphoric acid (50:50)v/v **Wavelength:** 260 nm **Flow Rate:**1.0 mL/min	
7	Development and Validation of Stability-indicating assay UHPLC Method for Simultaneous analysis of Dolutegravir, Lamivudine and Tenofovir disoproxil fumarate in Bulk and Pharmaceutical Formulation	**HPLC METHOD** **Stationary phase:** BEH C18 (150 mm × 4.6 mm,1.7μm) column **Mobile phase:** Acetonitrile:water(40:60) v/v,pH 6.5 was adjusted with 0.1% OPA. **Wavelength:** 262 nm **Flow Rate:**1.0 mL/min **Retention Time:** Lamivudine- 0.69 min Dolutegravir-1.33 min Tenofovir Disoproxil Fumerate: 2.36 min	77

Table 2.10 Reported Method for Combination of Dolutegravir, Lamivudine and Tenofovir alafenamide drugs with others

Sr.no	Title	Method and Description	Ref

1	RP-HPLC method development and validation for the simultaneous estimation of dolutegravir , emtricitabine, and tenofovir alafenamide in tablet dosage form	**HPLC METHOD:** **Stationary phase:** Qualisil-5 BDS C18 column (250 mm × 4 mm, 5 µm) **Mobile phase:** Acetonitrile:OPA(0.1%) adjusted in water pH 4.7 with triethylamine in the composition of (43:57) v/v **Wavelength:** 271 nm **Flow Rate**:1.2 mL/min **Retention Time**: Dolutegravir: 8.321 mins, Emtricitabine:2.210 mins Tenofovir alafenamide:4.089 min	78
2	Development and Validation of Of RP-HPLC method for estimation of Dolutegravir and Ripivirine in bulk and pharmaceutical dosage form and its application to	**HPLC METHOD:** **Stationary phase:** Phenomenex C18 (150 mm x 4.6 mm, 5 µm) **Mobile phase:** 0.1% Ortho phosphoric acid: acetonitrile in the rato of (60:40) v/v **Wavelength:** 262 nm **Flow Rate**:1.0 mL/min **Retention Time**: Dolutegravir: 4.35 mins, Ripivirine:7.73 mins	79
3	Stability Indicating Method Development and Validation for the	**HPLC METHOD:** **Stationary phase:** Hypersil BDS C18 (250 mm x 4.6 mm, 5.0 µ) column	80

	Simultaneous Estimation of Emtricitabine, Dolutegravir and tenofovir alafenamide in their combined doase form	**Mobile phase:**0.5 M potassium dihydrogen phosphate buffer: acetonitrile (80:20) v/v, pH 3.5 ± 0.1 maintained by 0.1 % o-phosphoric acid **Wavelength:** 260 nm **Flow Rate**:1.0 mL/min **Retention Time**: Dolutegravir: 6.783 mins, Emtricitabine:8..939 mins tenofovir alafenamide:4.089 min	
4	RP-HPLC Development and Validation of assay and uniformity of dosage units by content uniformity for in house lamivudine and abacavir combined tablet	**HPLC METHOD** **Stationary phase:** Waters Symmetry C 18 (100 mm x 4.6 mm), 3.5µ column **Mobile phase:** pH 3.0 Phosphate buffer: Methanol (80:20) v/v in isocratic mode **Wavelength:** 260 nm **Flow Rate:**1.0 mL/min **Retention Time:** Lamivudine- 2.122 min Abacavir - 3.194 min	81
5	A new stability indicating analytical method development and validation for the quantitative determination of emitricitabine and lamivudine by RP-HPLC	**HPLC METHOD** **Stationary phase:** Kromasil C18 column, 250 mm x 4.6 mm,5µ) **Mobile phase:** Methanol:phosphate buffer (40:60) v/v, pH 4 **Wavelength:** 261 nm **Flow Rate:**1.0 mL/min **Retention Time:** Lamivudine- 2.810 min emitricitabine– 4.727 min	82

3 Aim and Objective of work:

- Dolutegravir, Lamivudine and Tenofovir alafenamide combination is not official in BP, EP, IP and USP.
- Various methods such as UV-spectroscopic, HPLC, UPLC and HPTLC method are reported for individual, binary combination and combination of them with other drugs during literature survey but extensive research has been not done yet on tertiary combination of Dolutegravir, Lamivudine and Tenofovir alafenamide fumarate.
- In present research work developed a simple, precise, rapid and selective assay method for estimation of Dolutegravir, Lamivudine and Tenofovir alafenamide fumarate by HPLC in pharmaceutical dosage form and performed validation parameters according to ICH Guideline.

Registrar
Swarrnim Startup & Innovation University
At : Boyan Rathod, Gandhinagar.

4 EXPERIMENTAL WORK:

4.1 Instruments And Apparatus

The list of instruments and apparatus used in method development are shown in Table 6.1

Table 4.1: List of Instrument and apparatus used

Sr. No.	Instruments	Model No.	Manufacturer
1	FT-IR spectrophotometer (Software: Horizon Mb)	MB 3000	ABB
2	Melting Range Apparatus	-	Megha Enterprise
3	HPLC (Software: Empower 3)	Water Alliance 2695 (Detector: UV & PDA)	Alliance
4	Analytical balance	XP2U	Mettler Toledo
5	pH meter	780 pHmeter	Metrohm
6	Ultra sonicator	Leelasonic-100	LeelaSonic
7	Glass wares: Volumetric flask, Pipettes, Beaker, Measuring cylinder	-	Borosil

4.2 Materials And Reagents

The list of materials used in method development is shown in Table 4.2

Table 4.2: List of material used

Materials	Source
Dolutegravir sodium	Emcure Pharmaceuticals Limited Gandhinagar, Gujarat, India.
Lamivudine	
Tenofovir AF	
Placebo	

Registrar
Swarrnim Startup & Innovation University
At : Boyan Rathod, Gandhinagar.

The list of chemical and reagents used in method development is shown in Table 4.3

Table 4.3: List of chemicals and reagents used

Sr. No.	Name of Reagent/Chemical	Make	Grade
1	Trifluoro acetic acid	Rankem	HPLC grade
2	Methanol	Rankem	HPLC grade
3	Acetonitrile	Rankem	HPLC grade
4	Water	Milli-Q	Milli-Q

4.3 Identification Of Drug

Identification of standard Dolutegravir,Lamivudine and Tenofovir alafenamide fumarate was carried out by melting point study and infrared spectroscopic study.

4.3.1 Identification by solubility Study:

The sample was taken in test tube and observed for solubility in various solvents like water, methanol and acetonitrile. Result of solubility is reported according to USP solubility criteria (Table 4.4) which show in Table 5.1, 5.2, 5.3.

Table 4.4: USP Solubility Criteria

Descriptive terms	Part of the solvent required per part of solute
Very soluble	Less than 1
Freely soluble	From 1 to 10
Soluble	From 10 to 30
Sparingly soluble	From 30 to 100
Slightly soluble	From 100 to 1000
Very slightly soluble	From 1000 to 10,000
Practically insoluble	10,000 and over

4.3.2 Checking melting point:

It was done by Capillary melting point determination method. A few crystals of the compound are placed in a thin-walled capillary tube 10-15 cm long, about 1 mm in inside diameter, and closed at one end. The capillary, which contains the sample, and a thermometer are then suspended so they can be heated slowly and evenly. The temperature range over which the sample is observed to melt is taken as the melting point.Melting point of Dolutegravir, Lamivudine and Tenofovir Alafenamide was checked by Melting point apparatus.

Registrar
Swarrnim Startup & Innovation University
At : Boyan Rathod, Gandhinagar.

4.3.3 IR Spectra Determination:

FT-IR was taken via ATR technique (Attenuated Total Reflectance) which is used as an alternative technique for KBr pellet technique. In this technique minute quantity of standard is taken and put on the instrument where by moving nods clockwise it gets attached to sample placed and IR spectrum is recorded. FT-IR was scanned from 4000-400 cm-1. The FT-IR spectra of Dolutegravir, Lamivudine and Tenofovir AF are shown in Fig. 7.3, Fig. 7.6 and Fig. 7.9 respectively which are then compared with the reference FT-IR spectra of Dolutegravir, Lamivudine and Tenofovir AF which are shown in Fig. 7.3, Fig. 7.6 and Fig. 7.9 respectively).Principle IR peaks were observed for Dolutegravir, Lamivudine and Tenofovir AF is shown in (Fig. 7.2, Fig. 7.5 and Fig. 7.6 respectively).

4.4 Preparation Of Solutions:

4.4.1 Diluent preparation:

Buffer preparation:Accurately pipetted out and transferred 1.0 mL Trifluoroacetic acid in 1000 mL of Water, mixed it well.

A homogeneous mixture of buffer and methanol was prepared in ratio of 500:500 v/v, mixed it well and sonicated to degas.

4.4.2 Blank solution:

Used diluent as blank.

4.4.3 Preparation of Common Placebo solution:

Accurately weighed and transferred 1645 mg of common placebo into 500 mL clean and dry volumetric flask. Added 150 mL of buffer and allowed to stand for 20 minutes. Added 250 mL of methanol and sonicated for 45 minutes at temperature below 25°C with intermittent shaking. Allowed the solution to attain room temperature. Diluted to volume with buffer and mixed it well. Centrifuged this solution at 3000 rpm for 10 minutes. Diluted 5.0 mL of supernatant into 50 mL clean and dry volumetric flask. Diluted to volume with diluent and mixed it well. Filtered the test solution through Nylon 0.45 µ (Microsep. NN) filter and discarded first 5 mL of filtrate.

Registrar
Swarrnim Startup & Innovation University
At : Boyan Rathod, Gandhinagar.

4.4.4 Preparation of Standard stock solution-1(Lamivudine-3000 µg/mL)

Weighed and transferred accurately about 75.0 mg Lamivudine standard in to 25 mL volumetric flask. Added 12.5 mL of methanol and sonicated to dissolve. Diluted to volume with buffer solution and mixed it well.

4.4.5 Preparation of Standard stock solution-2:(Dolutegravir sodium-526.2 µg/mL,Tenofovir Alafenamide Fumarate- µg/mL)

Weighed and transferred accurately about 52.62 mg Dolutegravir sodium standard and 28.0 mg of Tenofovir Alafenamide Fumarate standard in to 100 mL volumetric flask. Added 50 mL of methanol and sonicated to dissolve. Diluted to volume with buffer solution and mixed it well.

4.4.6 Preparation of Standard Solution:(Dolutegravir sodium-52.62 µg/mL,Lamivudine-300 µg/mL and Teno fovir Alafenamide Fumarate-28 µg/mL)

Pipetted out and Transferred 5.0 mL of Standard Stock Solution-1 and 5.0 mL of Standard Stock Solution-2 into 50 mL volumetric flask. Made up the volume with diluent and mixed.

4.4.7 Preparation of Sample Solution:(Dolutegravir sodium-52.62 µg/mL,Lamivudine- 300 µg/mL and Teno fovir Alafenamide Fumarate-28 µg/mL)

Accurately weighed and transferred 5 intact tablets into 500 mL clean and dry volumetric flask. Added 150 mL of buffer and allowed to stand for 20 minutes to disperse the tablets completely. Added 250 mL of methanol and sonicated for 45 minutes at temperature below 25°C with intermittent shaking. Allowed the solution to attain room temperature. Dilutede to volume with buffer and mixed it well. Centrifuged this solution at 3000 rpm for 10 minutes. Diluted 5.0 mL of supernatant into 50 mL clean and dry volumetric flask. Diluted to volume with diluent and mixed it well. Filtered the test solution through Nylon 0.45 µ (Microsep. NN) filter and dediscard first 5 mL of filtrate.

Registrar
Swarrnim Startup & Innovation University
At : Boyan Rathod, Gandhinagar.

4.4.8 Assay for Dolutegravir

$$= \frac{AT1}{100} \times \frac{WS1}{AS1} \times \frac{5}{100} \times \frac{500}{50} \times \frac{50}{WT} \times \frac{AV}{5} \times \frac{419.38}{LC1} \times \frac{P}{441.36} \times \frac{1}{100}$$

Where,

AT1 : Peak area of Dolutegravir peak in sample solution

AS1 : Average peak area of Dolutegravir Standard solution

WS1 : Weight of Dolutegravir sodium standard (mg)

WT : Weight of sample (mg)

AV : Average weight of tablet (mg)

LC1 : Label claim for Dolutegravir in tablet (mg)

P1 : % Purity/Potency Dolutegravir sodium of standard

419.38 : Molecular weight of Dolutegravir (free base)

441.36: Molecular weight of Dolutegravir sodium (as salt)

4.4.9 % Assay for Lamivudine

$$= \frac{AT2}{100} \times \frac{WS1}{AS2} \times \frac{5}{25} \times \frac{500}{50} \times \frac{50}{WT} \times \frac{AV}{5} \times \frac{P2}{LC2} \times \frac{1}{100}$$

Where,

AT2 : Peak area of Lamivudine peak in sample solution

AS2 : Average peak area of Lamivudine Standard solution

WS1 : Weight of Lamivudine standard (mg)

WT : Weight of sample (mg)

AV : Average weight of tablet (mg)

LC2 : Label claim for Lamivudine in tablet (mg)

P2 : % Purity/Potency Lamivudine of standard

Registrar
Swarrnim Startup & Innovation University
At : Boyan Rathod, Gandhinagar.

4.4.10 Assay for Tenofovir Alafenamide Fumarate

$$= \frac{AT3}{AS3} \times \frac{WS3}{100} \times \frac{5}{50} \times \frac{500}{WT} \times \frac{50}{5} \times \frac{AV}{LC3} \times \frac{P3}{100} \times 100$$

Where,

AT3 : Peak area of Tenofovir AF peak in sample solution

AS3 : Average peak area of Tenofovir AF Standard solution

WS3 : Weight of Tenofovir AF sodium standard (mg)

WT : Weight of sample (mg)

AV : Average weight of tablet (mg)

LC3 : Label claim for Tenofovir AF in tablet (mg)

P3 : % Purity/Potency Tenofovir Alafenamide Fumarate of standard

4.5 Development Of Chromatographic Method:

4.5.1 Selection of wavelength for detection:

Standard solution of Dolutegravir (52.62 µg/mL), Lamivudine (300 µg/mL) and Tenofovir AF (28 µg/mL) as per standard solution was prepared for the selection of wavelength and scanned between 200-400 nm in PDA detector at medium scanning speed to get spectra. Wavelength was selected from the overlay spectra of the above solution. The overlay spectra of Dolutegravir, Lamivudine and Tenofovir AF are shown in Figure 10..

4.5.2 Selection and preparation of the mobile phase:

Selection of the mobile phase:

The standard solution of Dolutegravir, Lamivudine and Tenofovir AF was injected into the HPLC system and run in the solvent system. According to literature review and various trials using different ratios of various buffer, orthophosphoric acid,trifluoro acetic acid,acetonitrile,methanol and water as mobile phase (Results are shown in section 7.5), 0.1 % Trifluoro acetic acid in water was selected as a mobile phase A and mixture of water, acetonitrile and Trifluoroacetic acid was selected as a mobile phase B. It was finalized proportions in gradient system. It showed good resolution of chromatogram with symmetrical peaks

Registrar
Swarrnim Startup & Innovation University
At : Boyan Rathod, Gandhinagar.

4.5.3 Preparation of the optimized mobile Phase:

Buffer preparation:

Accurately pipetted out and transferred 1.0 mL Trifluoroacetic acid in 1000 mL of Water, mixed it well.

Mobile phase A preparation:

Used buffer as mobile phase A.

Mobile phase B preparation:

Prepared a homogeneous mixture of water, acetonitrile and Trifluoroacetic acid in ratio of 200:800:1 v/v/v, mixted i well and sonicated to degas.

4.5.4 Chromatographic conditions:

Water Alliance HPLC was used with UV/PDA detector and injector module to perform analysis of sample. As above mentioned, mobile phase was used and gradient mode was performed according to literature review. Sample were injected in Waters X-Bridge, 150 x 4.6 mm, 5 µm. Which was eluted at 1.0 mL/min. Injection volume kept 10 µL. Optimized chromatographic conditions are shown in Table 7.6.

4.5.5 Solution stability:

Stability of analytical solution was carried out by comparing initial area of a freshly prepared standard solution and sample solution at different time interval. Results shown in Table 5.11 to 5.16.

4.6 Method Validation:

Method validation parameters studied as per ICH guidelines and follows acceptance criteria as per In-house method of Emcure Pharmaceuticals Ltd. The performance characteristics considered for validation of the optimized method were: specificity, linearity and working range, accuracy, precision and robustness.

4.6.1 System suitability (n=5):

System suitability was performed and calculated at the start of study for each validation parameter. The values of system suitability results were recorded. Results shown in Table 5.8, 5.9 and 5.10 respectively.

Registrar
Swarrnim Startup & Innovation University
At : Boyan Rathod, Gandhinagar.

4.6.2 Specificity:

Interference from blank & placebo

Specificity of analytical method is ability to measure specifically the analyte of interest without interference from blank and placebo. Injected blank, placebo, standard solution, sample solution of Dolutegravir, Lamivudine and Tenofovir AF (preparation of solution as per section 4.2) and checked the peak purity angle and peak purity threshold Dolutegravir, Lamivudine and Tenofovir AF in standard and sample preparation was reported in Table 5.11.

4.6.3 Linearity and Range (n=5):

Prepared Linearity stock solution as given in table 4.5.

Table 4.5 Preparation of Linearity stock solution

Sr. no	Name	Weigh to be taken in mg	Dilute to volume with Methanol
1	Dolutegravir sodium	65.78 mg	25 mL
2	Lamivudine	375 mg	
3	Tenofovir AF	35 mg	

These stock solutions was further diluted 10ml to 50 mL with diluent (Solution A). Further diluted this stock solution to prepare different Linearity concentration levels given in table 4.6.

Table 4.6: Preparation of Linearity concentration levelsLimit of Detection (LOD) and Limit of Quantification (LOQ):

Linearity Level	Level in % of target concentration	Solution A (mL)	Volume make up with diluent(mL)	Conc. of Dolutegrair (µg/mL)	Conc. of Lamivudine (µg/mL)	Conc. of Tenofovir AF (µg/mL)
Level-1	50	2.5	50	26.33	150	14
Level-2	75	3.75	50	39.47	225	21
Level-3	100	5	50	52.62	300	28
Level-4	125	6.25	50	65.78	375	35
Level-5	150	7.5	50	78.93	450	42

Registrar
Swarrnim Startup & Innovation University
At : Boyan Rathod, Gandhinagar.

According to ICH guideline LOD and LOQ was determine by using standard deviation of response and slop of calibration curve.

LOD = 3.3 σ/S LOQ = 10 σ/S

Where, σ = Standard deviation of response. S = Slop of calibration curve

4.6.4 Accuracy:

Standard solution:

Prepared Standard solution as per preparation of solution shown in section 6.2.

Sample preparation for Accuracy:

4.6.4.1 For 50% level:

Accurately weighed and transferred 1645 mg of placebo powder, 131.55 mg of Dolutegravir sodium API, 750 mg of Lamivudine API, and 70 mg of Tenofovir Alafenamide Fumarate API into 500 mL clean and dry volumetric flask. Added 150 mL of buffer and allow to stand for 20 minutes. Added 250.0 mL of methanol and sonicated for 45 minutes at temperature below 25°C with intermittent shaking. Allowed the solution to attain room temperature. Diluted to volume with buffer and mixed it well. Centrifuged this solution at 3000 rpm for 10 minutes. Diluted 5.0 mL of supernatant into 50 mL clean and dry volumetric flask. Diluted to volume with diluent and mixed it well. Filtered the test solution through Nylon 0.45 µ (Microsep. NN) filter. Discarded first 5 mL of filtrate.Prepared sample in triplicate.

4.6.4.2 For 100% level:

Accurately weighed and transfered 1645 mg of placebo powder, 263.20 mg of Dolutegravir sodium API, 1500 mg of Lamivudine API, and 140 mg of Tenofovir Alafenamide Fumarate API into 500 mL clean and dry volumetric flask. Added150 mL of buffer and allowed to stand for 20 minutes. Added 250.0 mL of methanol and sonicated for 45 minutes at temperature below 25°C with intermittent shaking. Allowed the solution to attain room temperature. Diluted to volume with buffer and mixed it well. Centrifuged this solution at 3000 rpm for 10 minutes. Diluted 5.0 mL of supernatant into 50 mL clean and dry volumetric flask. Dilutede to volume with diluent andd it mix well. Filtered the test solution through Nylon 0.45 µ (Microsep. NN) filter. Discard first 5 mL of filtrate. Prepared sample in triplicate.

Registrar
Swarrnim Startup & Innovation University
At : Boyan Rathod, Gandhinagar.

4.6.4.3 For 150% level:

Accurately weighed and transferred 1645 mg of placebo powder, 394.65 mg of Dolutegravir sodium API, 2250 mg of Lamivudine API, and 210 mg of Tenofovir Alafenamide Fumarate API into 500 mL clean and dry volumetric flask. Added 150 mL of buffer and allowed to stand for 20 minutes. Added 250.0 mL of methanol and sonicated for 45 minutes at temperature below 25°C with intermittent shaking. Allowed the solution to attain room temperature. Diluted to volume with buffer and mixed it well. Centrifuged this solution at 3000 rpm for 10 minutes. Diluted 5.0 mL of supernatant into 50 mL clean and dry volumetric flask. Diluted to volume with diluent and mixd it well. Filtered the test solution through Nylon 0.45 µ (Microsep. NN) filter. Discarded first 5 mL of filtrate .Prepared sample in triplicate.

Table 4.7 Preparation of Accurcy concentration levels

Level	Placebo weight in mg	Weight (mg) of Dolutegravir sodium	Weight (mg) of Lamivudine	Weight (mg) of Tenofovir Alafenamide Fumarate	Conc.in µg/mL of Dolutegravir	Conc.in µg/mL of Lamivudine	Conc.in µg/mL of Tenofovir Alafenamide Fumarate
50%	1645	131.55	750.00	70.00	26.25	150	14
100%	1645	263.20	1500.00	140.00	52.64	300	28
150%	1645	394.65	2250.00	210.00	78.93	450	42

4.6.5 Precision:

4.6.5.1 System Precision:

Injected five injections of system suitability solution into the HPLC as per the method of analysis.

4.6.5.2 Method precision:

Sample Preparation:

Prepared the sample solution as per preparation of solution shown in section 4.2.

Registrar
Swarrnim Startup & Innovation University
At : Boyan Rathod, Gandhinagar.

4.6.5.3 Intermediate Precision:

Sample Preparation: Prepared six assay sample preparations for Dolutegravir sodium 52.62 mg, Lamivudine 300 mg and Tenofovir Alafenamide Fumarate 28 mg Tablets of the same lot using a different analyst, a different column, on a different day and inject again into a different HPLC system using the method as described under preparation of solution shown in section 6.2.

4.6.6 Robustness:

Prepared sample preparations of Dolutegravir sodium 52.62 mg, Lamivudine 300 mg and Tenofovir Alafenamide Fumarate 28 mg Tablets as per preparation of solution shown in section 4.2. Injected this solution with different chromatographic conditions as specified below:

Changed in Flow rate (± 0.10 mL /minute) Changed in Wavelength (±2 nm)

Changed in organic phase ratio in mobile phase Composition (±5%)

- **Budget estimate**

Category	Year 1	Year 2	Total (INR)
Chemicals and Reagentss	42,000	40,000	82,000
Equipment and Instrumentation	75,000	0	75,000
Method Validation Costs	45,000	40,000	85,000
Tablet Formulation and Dosage Testing	30,000	30,000	60,000
Quality Control and Stability Testing	40,000	4,000	44,000
Documentation and Reporting	35,000	5,000	40,000
Miscellaneous and Contingency	20,000	10,000	30,000
Publication and Dissemination	45,000	35,000	80,000
Regulatory and Compliance Fees	25,000	16,000	41,000
Total (INR)	**3,57,000**	**1,80,000**	**5,37,000**

Registrar
Swarrnim Startup & Innovation University
At : Boyan Rathod, Gandhinagar.

5 Results and Discussion

5.1 Identification of drug

Identification of standard Dolutegravir, Lamivudine and Tenofovir AF was carried out by solubility determination, melting point study and infrared spectroscopic study.

5.1.1 Solubility Determination:

Solubility of Dolutegravir, Lamivudine and Tenofovir AF in different solvents was determined according to USP solubility criteria shown in below Table 5.1, 5.2, and 5.3

Table 5.1 Solubility data for Dolutegravir

Solvent	Solubility of Dolutegravir	Quantity of sample	Volume of sample
Methanol	Very slightly soluble	100 mg	100 ml
Acetonitrile	Practically insoluble	10 mg	100 ml
2-propanol	Practically insoluble	10 mg	100 ml
Ethanol	Practically insoluble	10 mg	100 ml

Table 5.2 Solubility Data for Lamivudine

Solvent	Solubility of Lamivudine	Quantity of sample	Volume of sample
Water	Soluble	1 gm	10 ml
Methanol	Sparingly soluble	1gm	30 ml
96% Ethanol	Slightly soluble	100 mg	10 ml
Acetonitrile	Practically insoluble	10 mg	100 ml

Registrar
Swarrnim Startup & Innovation University
At : Boyan Rathod, Gandhinagar.

Table 5.3 Solubility Data for Tenofovir AF

Solvent	Solubility of Tenofovir AF	Quantity of sample	Volume of sample
Methanol	Soluble	1gm	10 ml
Water	Sparingly soluble	1gm	30 ml
Ethyl acetate	Practically insoluble	10 mg	100 ml

5.1.2 Checking melting point:[88-90]

Melting point of Dolutegravir, Lamivudine and Tenofovir Alafenamide was checked by Melting point apparatus .

Table: 5.4 Melting Point of Dolutegravir, Lamivudine and Tenofovir AF

Name of drug	Standard melting range[88-90]	Observed melting range
Dolutegravir sodium	190-193ºC	190-192°C
Lamivudine	160-162 °C	158-162°C
Tenofovir alafenamide fumarate	134-136°C	132-136°C

5.1.3 IR Spectra Determination[91]

Dolutegravir, Lamivudine and Tenofovir AF standard was scanned in the region 4000-400 cm-1 in FT-IR. The FT-IR spectra of Dolutegravir, Lamivudine and Tenofovir AF are shown in Fig. 5.3, Fig. 5.6 and Fig. 5.9 respectively which are then compared with the reference FT-IR spectra of Dolutegravir, Lamivudine and Tenofovir AF which are shown in Fig. 5.3, Fig. 5.6 and Fig. 5.9 respectively).Principle IR peaks were observed for Dolutegravir, Lamivudine and Tenofovir AF is shown in (Fig. 5.2, Fig. 5.5 and Fig. 5.6 respectively)

Registrar
Swarrnim Startup & Innovation University
At : Boyan Rathod, Gandhinagar.

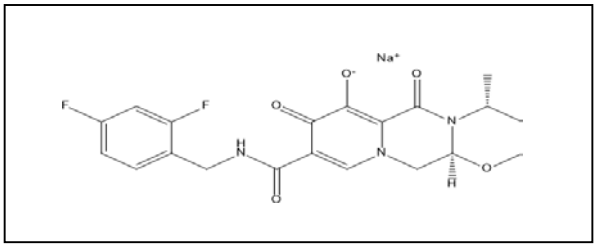

Figure 5.1: structure of Dolutegravir

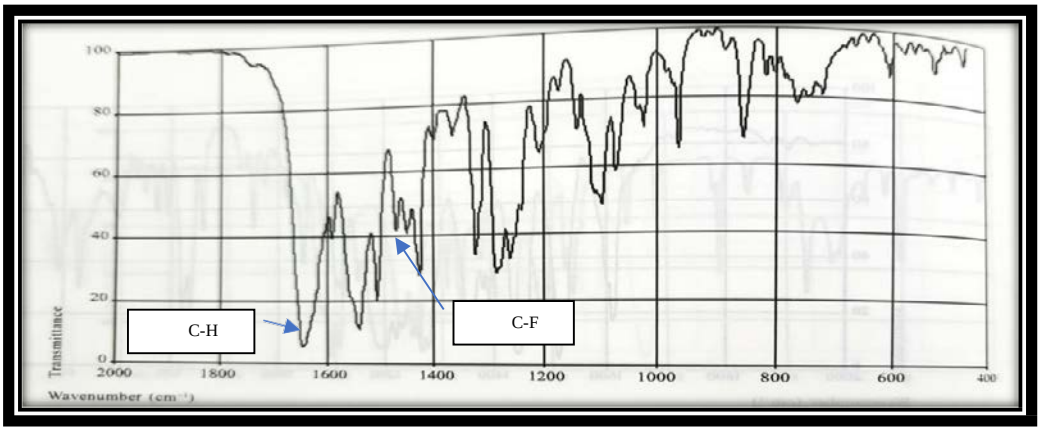

Figure 5.2: FT-IR spectra of reference Dolutegravir sodium

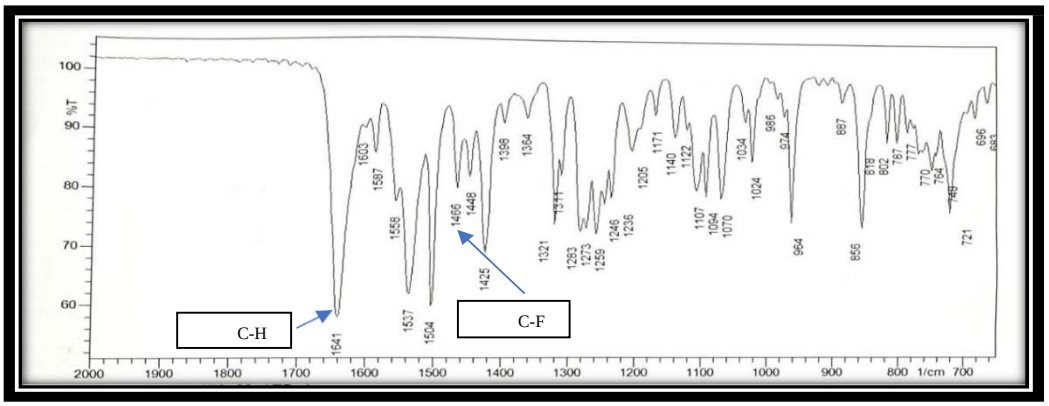

Figure 5.3:(1) FT-IR spectra of standard Dolutegravir sodium(fingerprint region of Dolutegravir sodium)

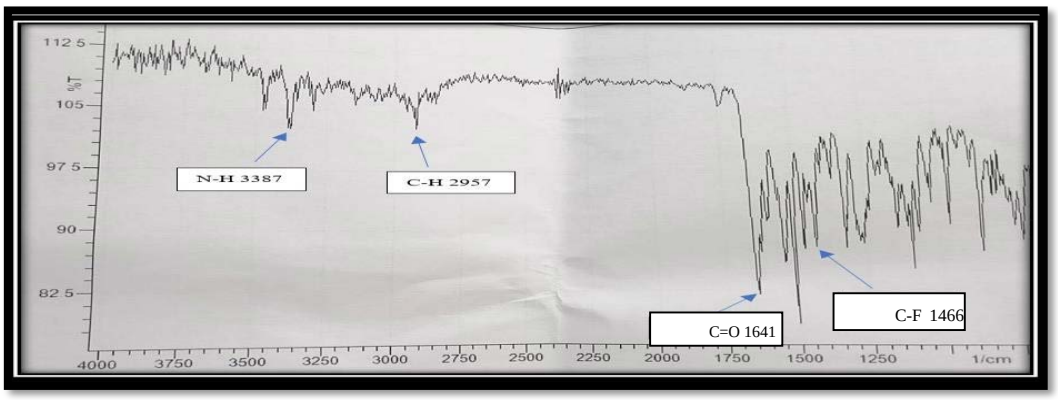

Registrar
Swarrnim Startup & Innovation University
At : Boyan Rathod, Gandhinagar.

Figure 5.3:(2) FT-IR spectra of standard Dolutegravir sodium

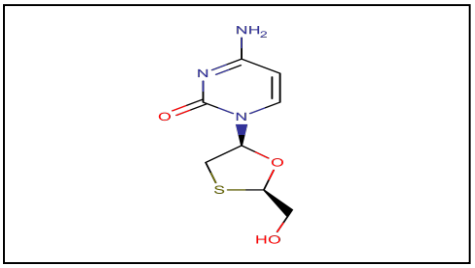

Figure 5.4: structure of Lamivudine

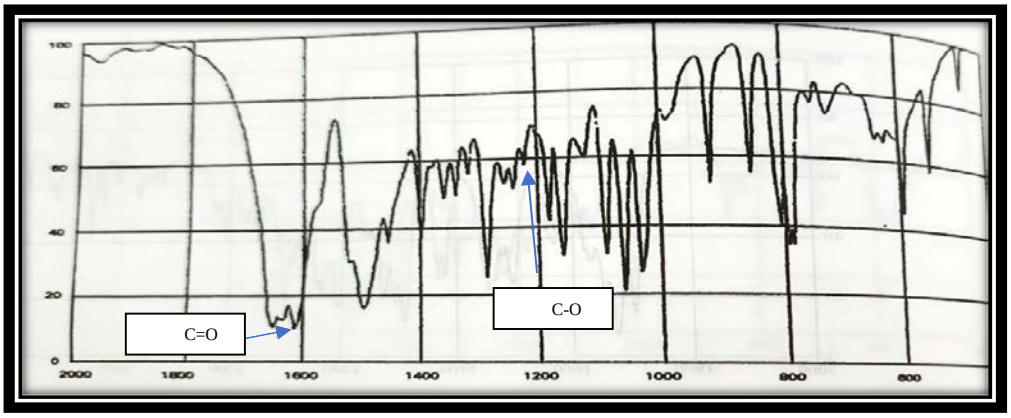

Figure 5.5: FT-IR spectra of reference Lamivudine

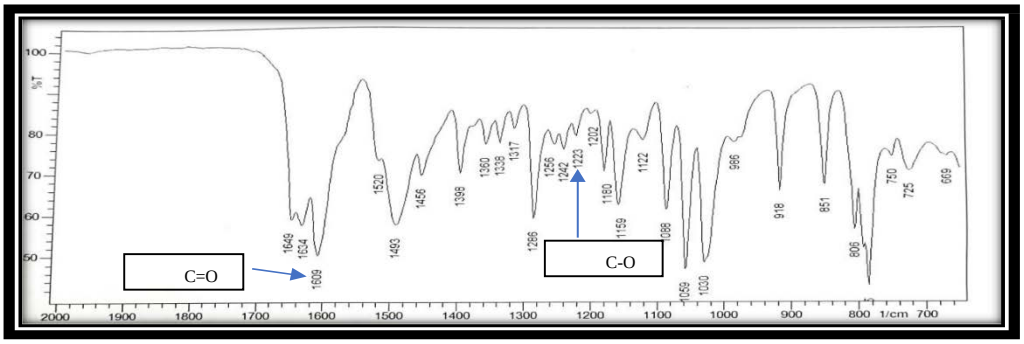

Figure 5.6 :(1) FT-IR spectra of standard Lamivudine(fingerprint region of Lamivudine)

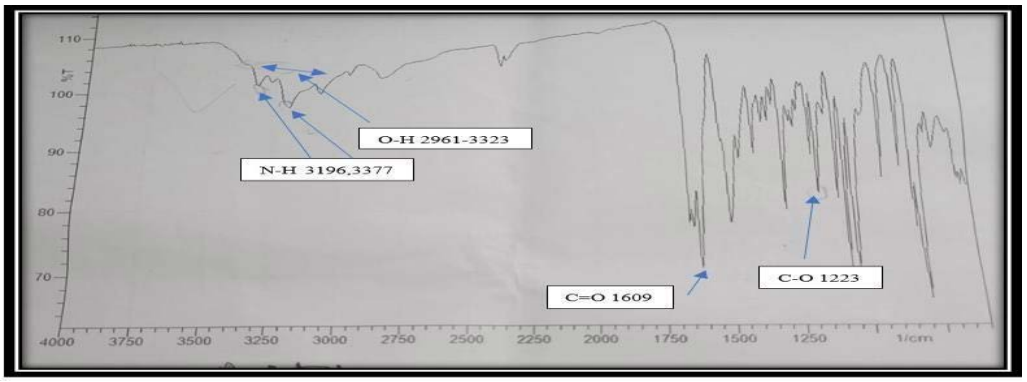

Registrar
Swarrnim Startup & Innovation University
At : Boyan Rathod, Gandhinagar.

Figure 5.6 :(2) FT-IR spectra of standard Lamivudin

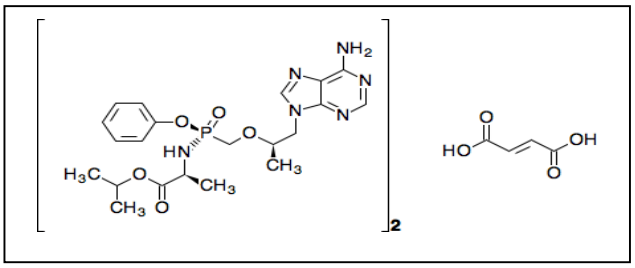

Figure 5.7: structure of Tenofovir Alafenamide Fumarate

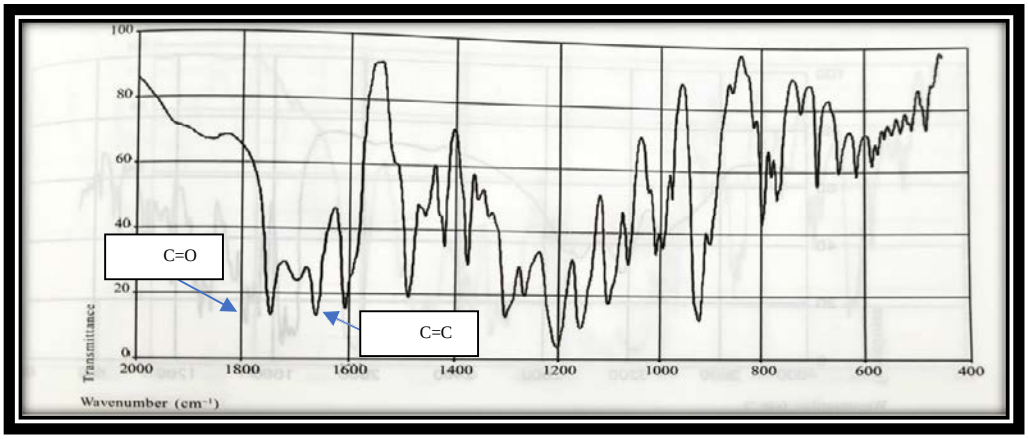

Figure 5.8 : FT-IR spectra of reference Tenofovir AF

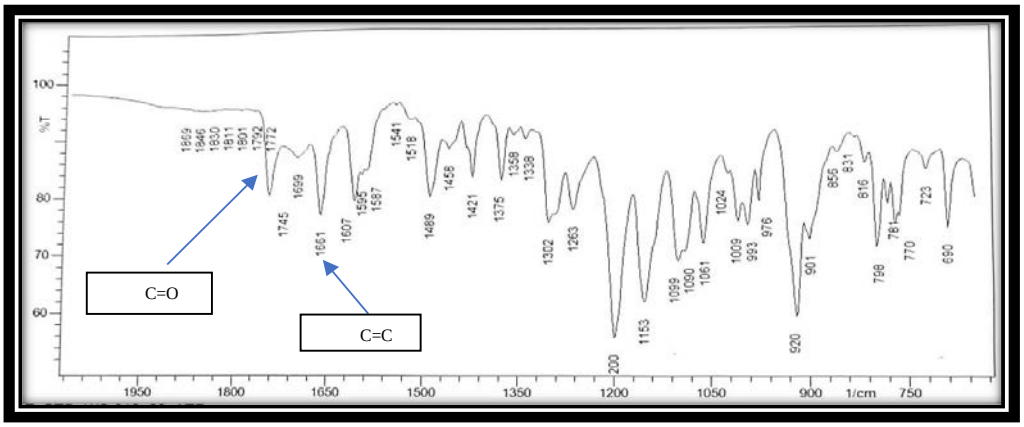

Registrar
Swarrnim Startup & Innovation University
At : Boyan Rathod, Gandhinagar.

Figure 5.9 :(1) FT-IR spectra of standard Tenofovir AF(fingerprint region of Tenofovir AF)

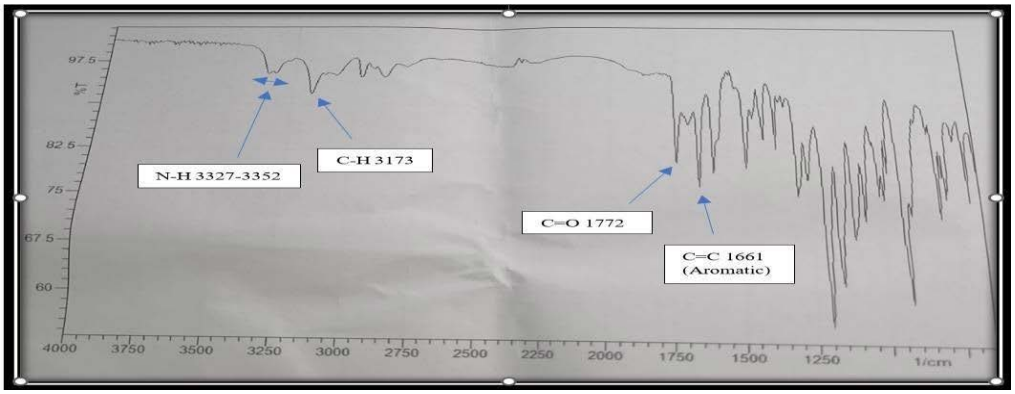

Figure 5.9 :(2) FT-IR spectra of standard Tenofovir AF

Table 5.5 IR interpretation of Dolutegravir sodium[91]

Functional group	**Reported peak(cm^{-1})**	**Observed peak(cm^{-1})**
fluoro compounds C-F (Stretching)	1400-1000	1468
C-H Alkane (Stretching)	3000-2840	2957
Secondary amines N-H (Stretching)	3350-3310	3387
C=O (Stretching)	1760	1637

Table 5.6 IR interpretation of Lamivudine[91]

Functional group	**Reported peak(cm^{-1})**	**Observed peak(cm^{-1})**
C=O Stretching	1760	1609
primary amines NH_2 (Stretching)	3500	3196,3377
C-O Stretching	1000-1300	1223
O-H Stretching	3400-3700	2961-3323

Registrar
Swarrnim Startup & Innovation University
At : Boyan Rathod, Gandhinagar.

Table 5.7 IR interpretation of Tenofovir Alafenamide Fumarate[91]

Functional group	Reported peak(cm^{-1})	Observed peak(cm^{-1})
C-H Alkane (Stretching)	3000-2840	3173
C=O (Stretching)	1750-1735	1772
Ptimary amine N-H (Stretching)	3500	3327-3352
Aromatic C=C (Stretching)	1600-1650	1661

7.2 Selection Of Wavelength For Detection:

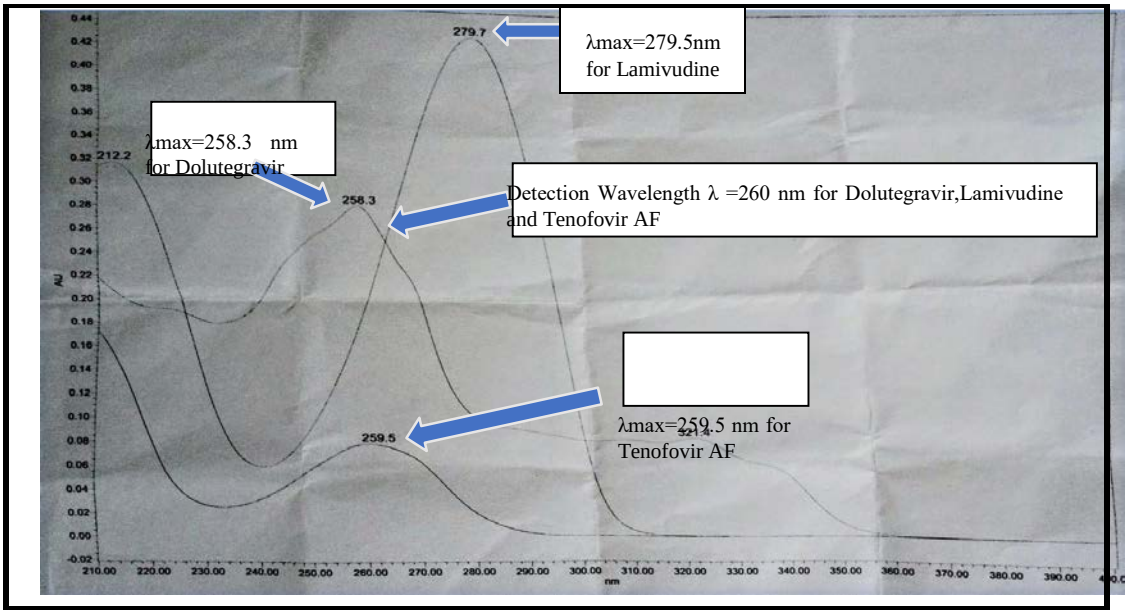

Figure 5.10 Wavelength spectra of Dolutegravir (52.62 µg/mL), Lamivudine (300µg/mL), Tenofovir AF (28 µg/mL)

From the above spectrum, the wavelength 260 nm was selected for a determination for Dolutegravir,Lamivudine and Tenofovir AF as showed a linear response at this wavelength.

5.2 Selection Of Mobile Phase And Optimized Chromatographic Conditions:

Registrar
Swarrnim Startup & Innovation University
At : Boyan Rathod, Gandhinagar.

5.2.1 Selection of the mobile phase:

For optimization of the mobile phase, several trials were done to select the best mobile phase for the separation of Dolutegravir, Lamivudine and Tenofovir AF an effective resolution and peak symmetry for all the three drugs. The trials for the selection of the mobile phase are shown in Table 5.8.

Table 5.8: Observation of trials taken for selection of mobile phase

<table>
<tr><th>Sr. No</th><th>Mobile Phase</th><th>Chromatographic conditions</th><th>Observation</th></tr>
<tr><td>1</td><td>Mobile phase A: Water:OPA (1000:1%v/v)
Mobile phase B: Water:Acetonitrile (200:800%v/v)
<table><tr><th>Time (min)</th><th>M.P. A</th><th>M.P. B</th></tr><tr><td>0</td><td>97</td><td>3</td></tr><tr><td>6</td><td>94</td><td>6</td></tr><tr><td>9</td><td>70</td><td>30</td></tr><tr><td>23</td><td>70</td><td>30</td></tr><tr><td>24</td><td>97</td><td>3</td></tr><tr><td>28</td><td>97</td><td>3</td></tr></table></td><td>Column: X-Bridge (150 mm× 4.6 mm, 5µm)
Run time:28 min
Retention time:
Dolutegravir:21 min
Lamivudine:5.2 min
Tenofovie AF:16 min</td><td>Sharp peak shape of Dolutegravir and Lamivudine were obtained but Tenofovir Alafenamife Fumarate’s peak shape was improper.</td></tr>
<tr><td>2</td><td>Mobile phase A: Water:TFA (1000:1%v/v)
Mobile phase B: Water:Acetonitrile:TFA (200:800:1%v/v)
<table><tr><td></td><td></td><td></td></tr><tr><td></td><td></td><td></td></tr><tr><td></td><td></td><td></td></tr><tr><td></td><td></td><td></td></tr><tr><td></td><td></td><td></td></tr><tr><td></td><td></td><td></td></tr></table></td><td>Column: X-Bridge (150 mm× 4.6 mm, 5µm)
Run time:28 min
Retention time:
Dolutegravir:20.1 min</td><td>Sharp peak shape of Tenofovir Alafenamife Fumarate was obtained. Good</td></tr>
</table>

Registrar
Swarrnim Startup & Innovation University
At : Boyan Rathod, Gandhinagar.

	Time (min) **M.P. A** **M.P. B** 0 97 3 6 94 6 9 70 30 23 70 30 24 97 3 28 97 3	Lamivudine:5.5 min Tenofovie AF:16.6 min ColumnnTemperature:45°C	satisfactory results were obtained.

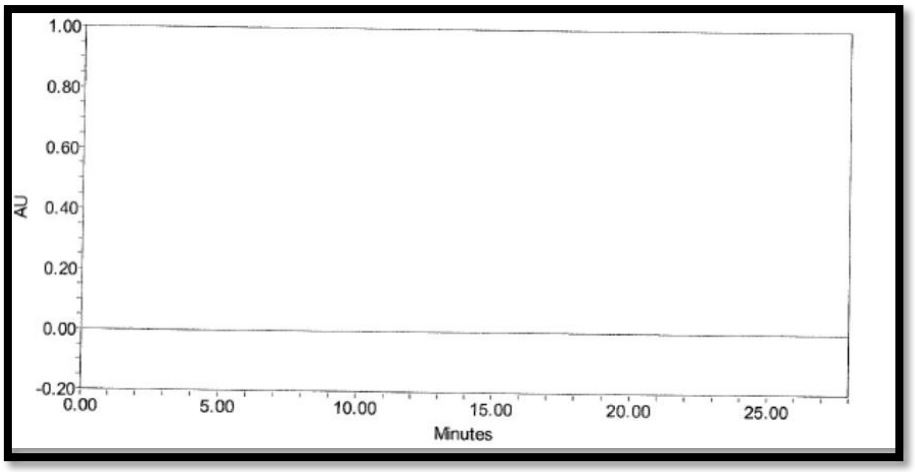

Figure 5.11 Chromatogram of Blank at 260 nm

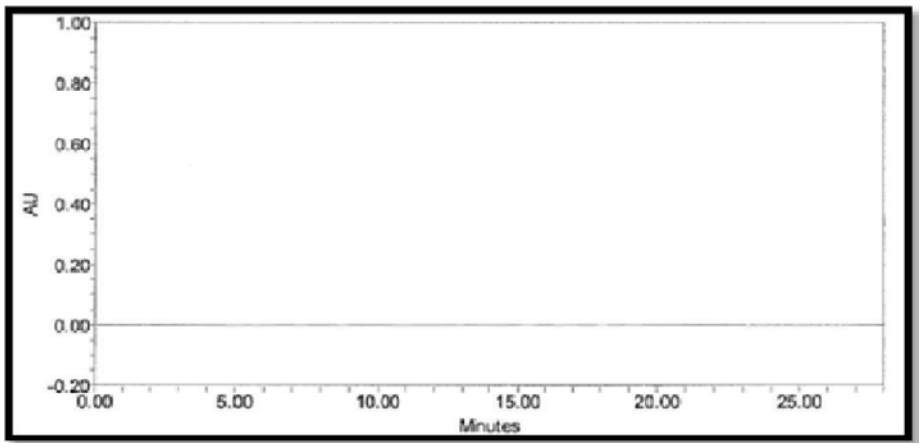

Registrar
Swarrnim Startup & Innovation University
At : Boyan Rathod, Gandhinagar.

Figure 5.12 Chromatogram of Placebo at 260 nm

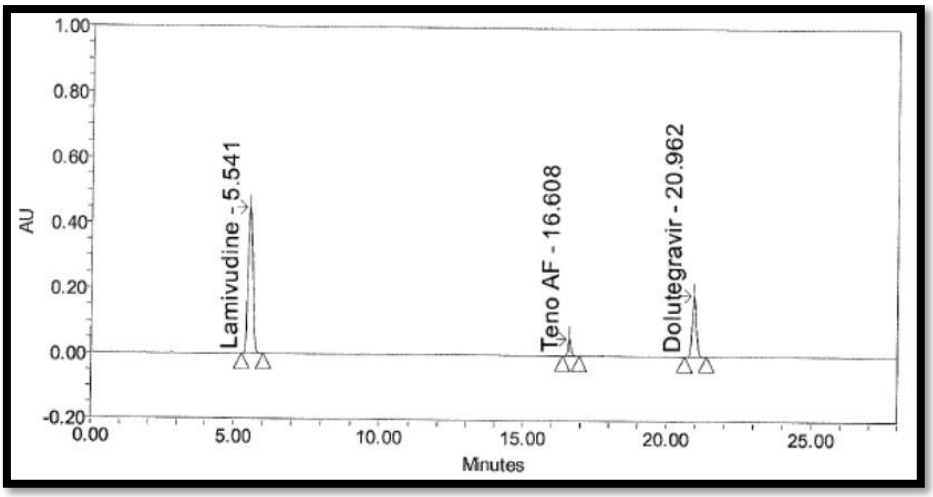

Figure 5.13 Chromatogram of standard Dolutegravir (52.62 µg/mL), Lamivudine (300 µg/mL) and Tenofovir AF (28 µg/mL) at 260 nm

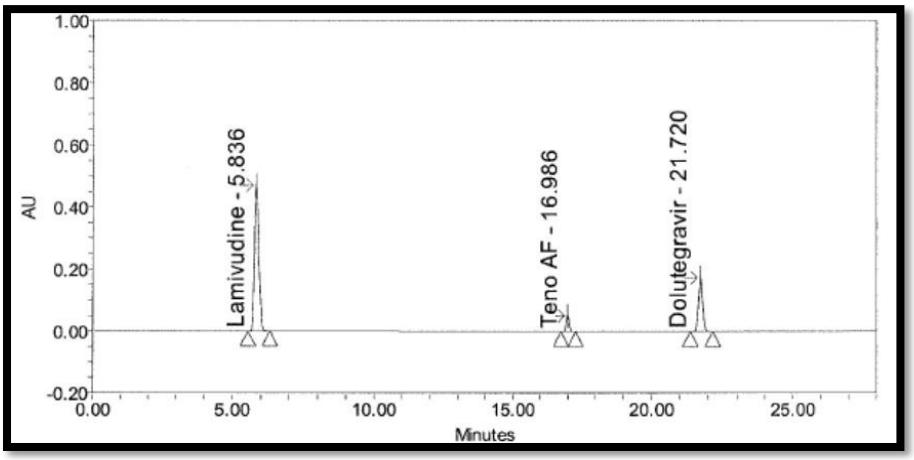

Figure 5.14 Chromatogram of sample Dolutegravir (52.62 µg/mL), Lamivudine (300 µg/mL) and tenofovir AF (28 µg/mL) at 260 nm

5.2.2 Optimized chromatographic conditions:

Table 5.9: Optimized chromatographic conditions shown in below Table

Column	Waters X-Bridge, 150 x 4.6 mm, 5 µm
Wavelength	260 nm
Flowrate	1.0 mL/minute
Injection volume	10 µL
Sample cooler temperature	6°C
Run time	28 minutes

Registrar
Swarrnim Startup & Innovation University
At : Boyan Rathod, Gandhinagar.

Retention time	About 4.5 minutes for Lamivudine, About 16 minutes for Tenofovir AF About 21 minutes for Dolutegravir
Mode	Gradient

Table 5.10: Gradient program

Time (Minutes)	Mobile phase- A (%)	Mobile phase- B (%)
0	97	3
6	94	6
9	70	30
23	56	44
24	97	3
28	97	3

5.3 Solution stability:

Stability of analytical solution was carried out by comparing initial area of a freshly prepared standard solution and sample solution at different time interval. The data is given in below table.

Table 5.11 Stability of Standard Solution data for Dolutegravir

Sr.no	Times (Hrs)	Area of Dolutegravir in Standard solution	% Result	% Recovery
1	0	1891747	99.45	100
2	6	1896287	99.70	100.25
3	18	1902170	100.00	100.55
4	22	1899362	99.85	100.4
5	41	1906061	100.21	100.76
6	49	1908311	100.32	100.87

Table 5.12 Stability of Standard Solution data for Lamivudine

Registrar
Swarrnim Startup & Innovation University
At : Boyan Rathod, Gandhinagar.

Sr.no	Times(Hrs)	Area of Lamivudine in Standard solution	% Result	% Recovery
1	0	5190305	99.40	100.00
2	6	5199616	99.58	100.17
3	18	5229707	100.15	100.75
4	22	5209638	99.77	100.37
5	41	5255173	100.64	101.24
6	49	5254008	100.62	101.22

Table 5.13 Stability of Standard Solution data for Tenofovir AF

Sr.no	Times(Hrs)	Area of Tenofovir AF in Standard solution	% Result	% Recovery
1	0	419580	99.40	100.00
2	6	417914	99.01	99.60
3	18	415058	98.33	98.92
4	22	411925	97.59	98.17
5	41	407866	96.62	97.20
6	49	401026	95.00	95.57

Table 5.14 Stability of Sample Solution data for Dolutegravir

Sr.no	Times(Hrs)	Area of Dolutegravir in Sample solution	% Result	%Absolute Difference
1	0	1919614	98.46	0
2	4	1921158	98.03	0.44
3	11	1921645	98.06	0.41
4	15	1919083	98.43	0.03
5	37	1954780	98.22	0.24
6	45	1953480	98.18	0.28

Registrar
Swarrnim Startup & Innovation University
At : Boyan Rathod, Gandhinagar.

Table 5.15 Stability of Sample Solution data for Lamivudine

Sr.no	Times(Hrs)	Area of Lamivudine in Stample solution	% Result	%Absolute Difference
1	0	5122246	98.86	0.00
2	4	5123614	98.89	0.03
3	11	5123378	98.88	0.02
4	15	5117077	98.76	0.10
5	37	5122922	98.97	0.01
6	45	5122289	98.86	0.00

Table 5.16 Stability of Sample Solution data for Tenofovir AF

Sr.no	Times(Hrs)	Area of Tenofovir AF in Sample solution	% Result	%Absolute Difference
1	0	418911	99.22	0.00
2	4	417591	98.91	0.31
3	11	414862	98.26	0.96
4	15	412567	97.72	1.50
5	37	412567	96.08	3.14
6	45	405647	95.24	3.98

Acceptance criteria:

The standard solution is considered to be stable till the time point where, % recovery of the stored standard solution against freshly prepared standard solution is between 98.0 and 102.0. Sample solution is considered to be stable, till the time point where, % absolute difference between the result value of that time point and its initial value is not more than 2.0.

Conclusion:

These data imdicate that the Dolutegravir's standard and sample solution are stable up to 49 Hrs and 45 Hrs respectively.Lamivudine's standard and sample solution is stable upto 49 Hrs and 45 Hrs respectively.Tenofovir AF's standard and sample solution is stable upto 22 Hrs and 15 Hrs respectively.

Registrar
Swarrnim Startup & Innovation University
At : Boyan Rathod, Gandhinagar.

5.4 Method Validation:

5.4.1 System suitability (n=5)

The results of system suitability test parameters were listed in Table 5.17, 5.18 and 5.19.

Table 5.17: System suitability parameters data for analysis of Dolutegravir

Replicate No.	Area	Retention time (min)	Tailing Factor	Theoretical Plates	Resolution
1	1871381	20.962	1.04	98683	16.7
2	1888766	20.968	1.04	97663	15.6
3	1892163	20.928	1.04	98502	16.7
4	1872201	20.920	1.04	98285	16.8
5	1894224	20.920	1.04	98016	15.6
Mean	1883747	NA			
±SD	9919.83				
%RSD	0.53				

Table 5.18: System suitability parameters data for analysis of Lamivudine

Replicate No.	Area	Retention time (min)	Tailing Factor	Theoretical Plates
1	5142676	5.541	1.19	5191
2	5103935	5.536	1.19	5235
3	5180522	5.541	1.19	5201
4	5149708	5.534	1.19	5224
5	5124950	5.531	1.19	5187
Mean	5140358.2	NA		
±SD	25573.36			
%RSD	0.50			

Table 5.19: System suitability parameters data for analysis of Tenofovir AF

Replicate No.	Area	Retention time (min)	Tailing Factor	Theoretical Plates	Resolution
1	420154	16.608	1.08	97836	47.4
2	419339	16.609	1.08	9743.9	45.9
3	417515	16.585	1.08	96305	45.1
4	415294	16.576	1.08	97425	44.5
5	413599	16.574	1.08	97770	43.0
Mean	417180.2				

Registrar
Swarrnim Startup & Innovation University
At : Boyan Rathod, Gandhinagar.

±SD	2449.44	NA
%RSD	0.59	

Acceptance criteria:

The Relative Standard Deviation (RSD) for Lamivudine, Tenofovir Alafenamide and Dolutegravir peak area in five replicate injections of standard solution should be not more than 2.0 %.

The tailing factor for Lamivudine, Tenofovir Alafenamide and Dolutegravir peak should be not more than 1.8, all injections should comply as per system suitability criteria.

The theoretical plates should be not less than 2000, all injections should comply as per system suitability criteria.

Conclusion:

Result of system suitability met acceptance criteria.

5.4.2 Specificity:

Specificity was performed by checking interference from blank and placebo at the retention time of all three drugs in standard and sample preparation. Chromatogram of blank,placebo,standard,and sample were shown in Figure 5.15- 5.18.

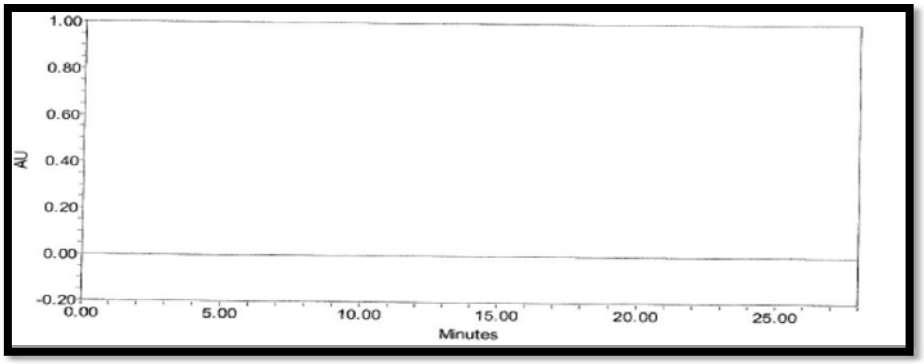

Figure 5.15 Chromatogram of Blank at 260 nm

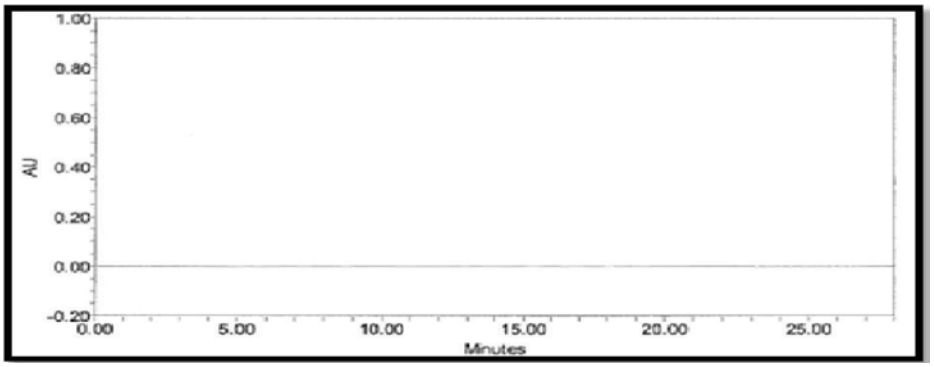

Figure 5.16 Chromatogram of Placebo at 260 nm

Registrar
Swarrnim Startup & Innovation University
At : Boyan Rathod, Gandhinagar.

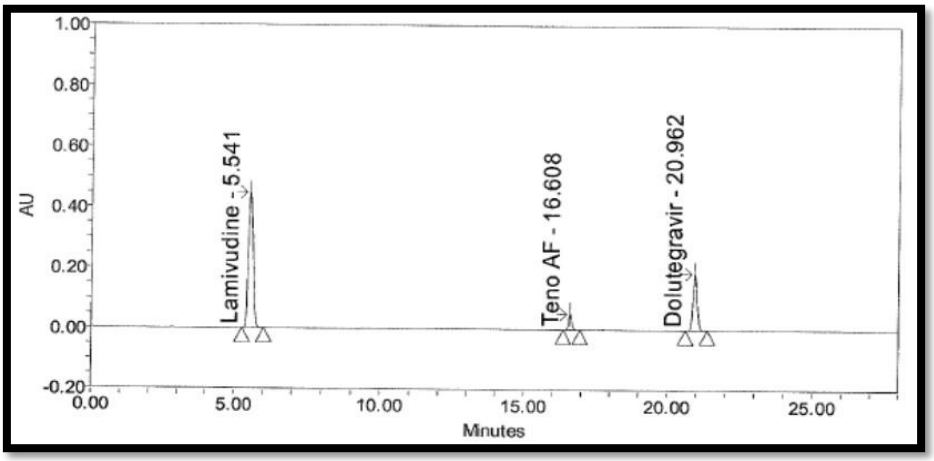

Figure 5.17 Chromatogram of standard Dolutegravir (52.62 µg/mL), Lamivudine (300 µg/mL) and Tenofovir AF (28 µg/mL) at 260 nm

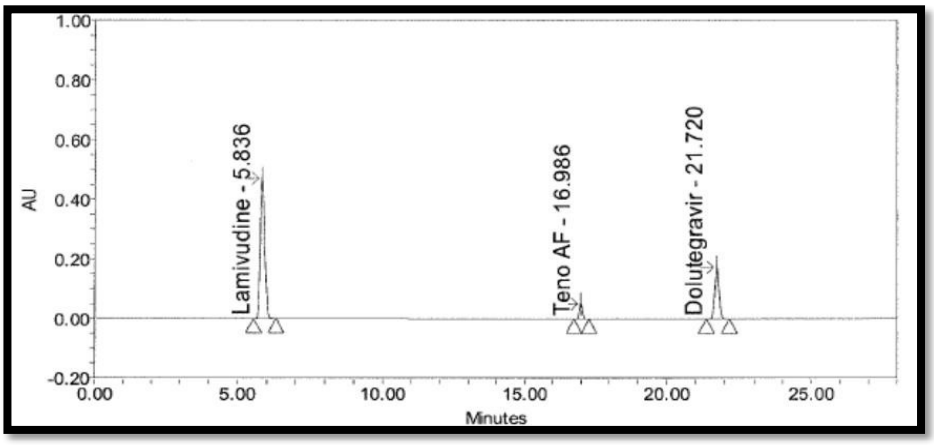

Figure 5.18 Chromatogram of sample Dolutegravir (52.62 µg/mL), Lamivudine (300 µg/mL) and Tenofovir AF (28 µg/mL) at 260 nm

Table 7.20: Peak Purity data

Sr. No.	Sample detail	Retention time	Peak area	Purity angle	Purity threshold	Peak purity
1	Blank solution	-	ND	-	-	NA
2	Placebo solution	-	ND	-	-	NA
3	Dolutegravir Standard	20.962	1733690	0.082	0.233	Pass
4	Dolutegravir Sample	21.720	1752989	0.090	0.257	Pass
5	Lamivudine Standard	5.541	5154560	0.061	0.241	Pass
6	Lamivudine Sample	5.836	5363572	0.066	0.259	Pass
7	Tenofovir AF Standard	16.608	385582	0.087	0.285	Pass
8	Tenofovir AF Sample	16.986	375295	0.093	0.298	Pass

Registrar
Swarrnim Startup & Innovation University
At : Boyan Rathod, Gandhinagar.

Acceptance criteria:

The principle peak should be well separated from any peak due to blank and placebo solution.

Conclusion: The peak of Dolutegravir, Lamivudine and Tenofovir AF are well resolved from any other peak. The placebo solution and blank solution does not show any peak at the retention time of Dolutegravir, Lamivudine and Tenofovir AF. The peak purity for peak due to Dolutegravir, Lamivudine and Tenofovir AF are passes.

5.4.3 Linearity and range (n=5):

The linearity study was performed for correlation coefficient of Dolutegravir, Lamivudine and Tenofovir AF as per method described in section 4.4.3 in chapter 4. Obtained data was listed in Table 5.21, 5.22 & 5.23 respectively and calibration curve of them was shown in Figure 5.20, 5.21 & 5.22.

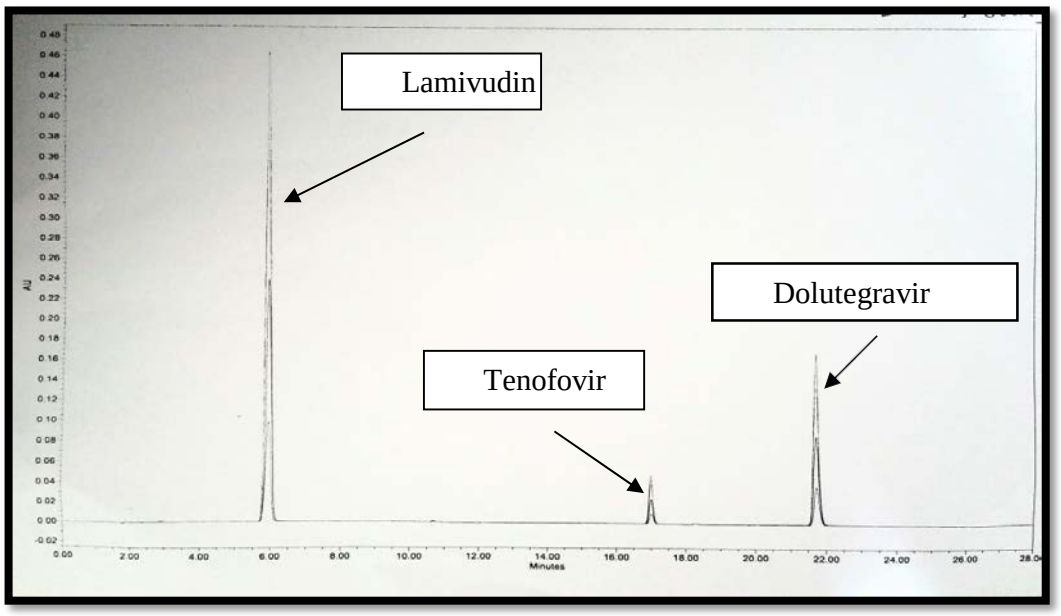

Figure 5.19 Linearity overlay chromatogram of Dolutegravir sodium, Lamivudine and Tenofovir AF of linearity different levels (50%-150%)

Registrar
Swarrnim Startup & Innovation University
At : Boyan Rathod, Gandhinagar.

Table 5.21: Calibration curve data for Dolutegravir

Level	% Linearity Level	Concentration in ppm	Mean peak area ± SD	% RSD
Level-1	50%	26.17	870659±4472.14	0.51
Level-2	75%	39.25	1247768±8366.60	0.67
Level-3	100%	52.62	1703692±16734.60	0.98
Level-4	125%	65.42	2122784±16730.69	0.79
Level-5	150%	78.50	2549574±14834.93	0.58
Regression Coefficient (R^2)			0.9997	
Correlation Coefficient (r)			0.9994	
Slope of regression line			32350.89	
Y-Intercept			3941.68	

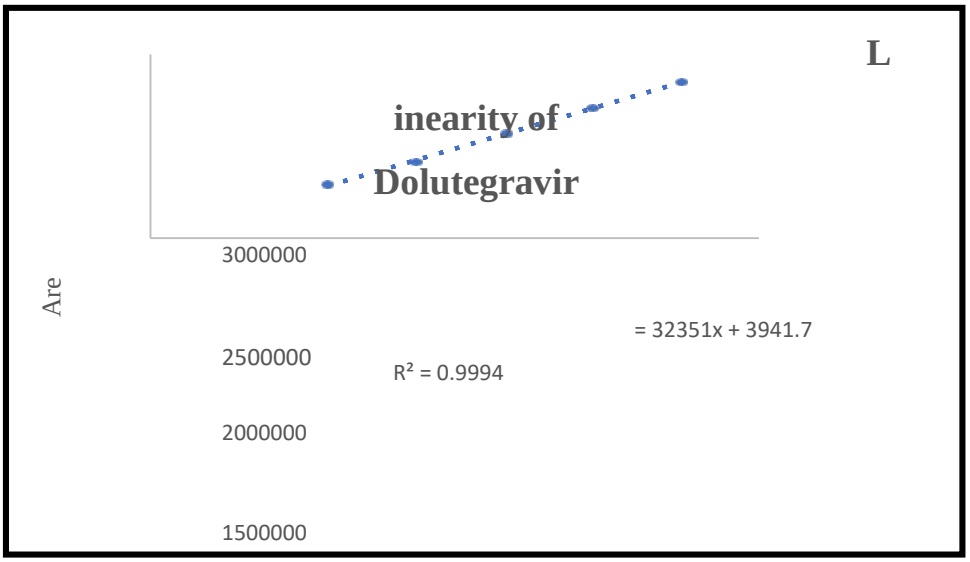

Figure 5.20 Linearity of Dolutegravir

Registrar
Swarrnim Startup & Innovation University
At : Boyan Rathod, Gandhinagar.

Level	% Linearity Level	Concentration in ppm	Mean peak area ± SD	% RSD
Level-1	50%	150	2530227±24494.90	0.97
Level-2	75%	225	3765871±27748.87	0.74
Level-3	100%	300	5054852±30496.23	0.60
Level-4	125%	375	6159668±28635.64	0.46
Level-5	150%	450	7455834±40865.63	0.55
Regresssion Coefficient (R^2)			0.9995	
Correlation Coefficient (r)			0.9997	
Slope of regression line			16342.26	
Y-Intercept			89434.33	

Table 5.22: Calibration curve data for Lamivudine

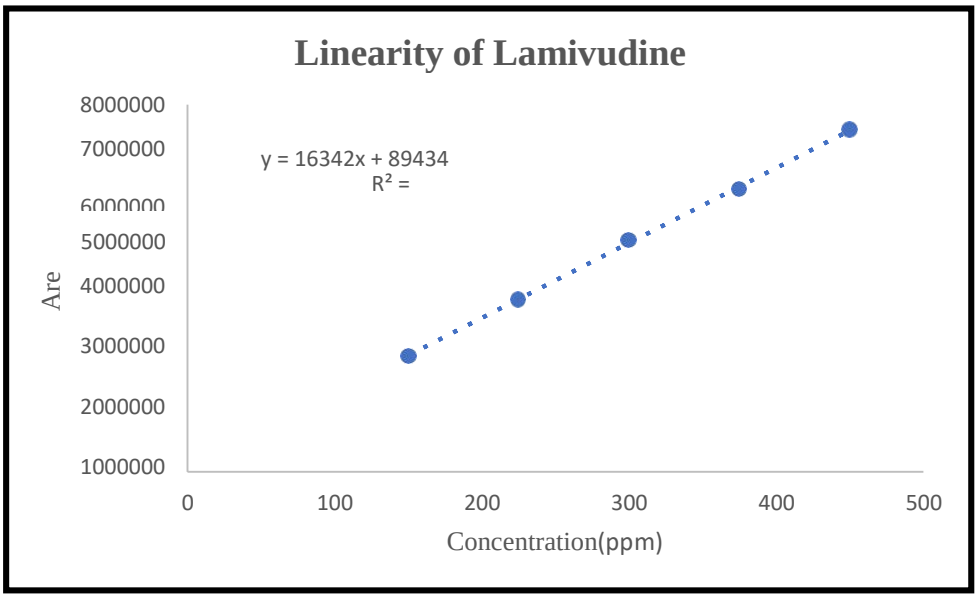

Figure 5.21 Linearity of Lamivudine

Registrar
Swarrnim Startup & Innovation University
At : Boyan Rathod, Gandhinagar.

Table 5.23: Calibration curve data for Tenofovir AF

Level	% Linearity Level	Concentration in ppm	Mean peak area ± SD	% RSD
Level-1	50%	14	192675±1000.01	0.52
Level-2	75%	21	297126±1821.83	0.61
Level-3	100%	28	384596±2280.35	0.59
Level-4	125%	35	476288±3305.97	0.69
Level-5	150%	42	576913±5319.30	0.92
Regresssion Coefficient (R^2)			0.9992	
Correlation Coefficient (r)			0.9996	
Slope of regression line			13441.66	
Y-Intercept			6464.72	

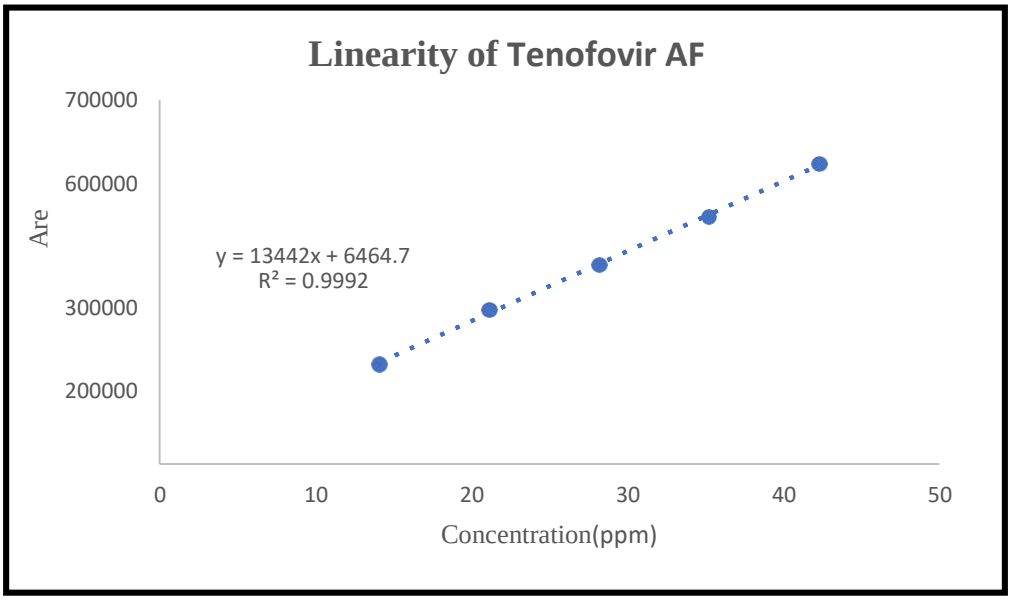

Figure 5.22 Linearity of Tenofovir AF

Acceptance criteria:

Correlation coefficient should be more than or equal to 0.999.

Conclusion:

Correlation coefficient (R^2) met acceptance criteria shows the method is linear over the concentration range of each of them respectively.

Registrar
Swarrnim Startup & Innovation University
At : Boyan Rathod, Gandhinagar.

5.4.4 Limit of Detection (LOD) and Limit of Quantification (LOQ):

LOD = 3.3 σ/S LOQ = 10 σ/S

Where, σ = Standard deviation of response. S = Slop of calibration curve

Table 5.24 Limit of Detection (LOD) and Limit of Quantification (LOQ):

Parameters	Dolutegravir	Lamivudine	Tenofovir AF
σ	4472.14	24494.90	1000.01
slope	32350.89	16342.26	13441.66
LOD (µg/mL)	0.4562	4.9463	0.2455
LOQ(µg/mL)	1.3824	14.9889	0.7440

5.4.5 Accuracy:(n=3)

Recovery for Dolutegravir, Lamivudine and Tenofovir AF was obtained in the range of 99.63-99.95%, 99.60-99.69 % and 99.01-99.46% respectively, as shown in Table 5.25, 5.26 and 5.27 respectively.

Table 5.25 Accuracy data for Dolutegravir

% Level	mg added	mg found	Peak area	Mean Peak Area±SD	%RSD	% Recovery	% Mean recovery
50%	0.02616	0.02630	977998	972112± 6451.804	0.66	100.56	99.95
		0.02596	965214			99.24	
		0.02617	973124			100.06	
100%	0.05231	0.05224	1899875	1896858± 9505.639	0.50	99.87	99.63
		0.05237	1904489			100.11	
		0.05187	1886210			99.15	
150%	0.07847	0.07791	2842854	2849937± 14417.16	0.51	99.29	99.66
		0.07856	2866526			100.11	
		0.07785	2840432			99.20	

Registrar
Swarrnim Startup & Innovation University
At : Boyan Rathod, Gandhinagar.

Table 5.26 Accuracy data for Lamivudine

% Level	mg added	mg found	Peak area	Mean Peak Area±SD	%RSD	% Recovery	% Mean recovery
50%	0.1490	0.14795	2631681	2636610± 18814.317	0.62	99.32	99.60
		0.14926	2654985			100.2	
		0.14748	2623165			99.00	
100%	0.0298	0.29826	5252246	5237320± 29298.33	0.56	100.11	99.69
		0.29550	5203564			99.18	
		0.29849	5256149			100.19	
150%	0.4469	0.44689	7892626	7872903± 40317.42	0.51	100.00	99.63
		0.44729	7899562			100.09	
		0.44315	7826521			99.16	

Table 5.27 Accuracy data for Tenofovie AF

% Level	mg added	mg found	Peak area	Mean Peak Area±SD	%RSD	% Recovery	% Mean recovery
50%	0.0139	0.01389	207682	206449± 1182.70	0.57	99.90	99.01
		0.01373	205324			98.77	
		0.01380	206341			99.25	
100%	0.0278	0.02738	415652	418299± 2292.87	0.55	98.48	99.42
		0.02765	419682			99.43	
		0.02764	419562			99.41	
150%	0.0417	0.04113	623523	627147± 3163.24	0.50	98.60	99.46
		0.04151	629354			99.52	
		0.04146	628564			99.40	

Acceptance criteria:

% Recovery at each concentration level for the individual sample should be between 98- 102%. RSD should be not more than 2.0%.

Conclusion:

Results met acceptance criteria.Hence, the method is precise.

Registrar
Swarrnim Startup & Innovation University
At : Boyan Rathod, Gandhinagar.

5.4.6 Precision:

5.4.6.1 System precision:

The results of system precision for Dolutegravir, Lamivudine and Tenofovir AF in Table 5.28. The %RSD for system precision of Dolutegravir, Lamivudine and Tenofovir AF were found to be 0.81, 0.88 and 0.91 respectively.

Table 5.28: Result of system precision

Sr. No.	Peak Area of Standard		
	Dolutegravir	**Lamivudine**	**Tenofovir AF**
1	1864380	5392656	400136
2	1854265	5383962	409365
3	1823203	5290530	409521
4	1862265	5389742	409215
5	1844259	5294963	409591
Mean	1849674	5350371	407566
±SD	15006.09	47153.88	3717.07
%RSD	0.81	0.88.	0.91

Acceptance criteria:

% RSD of principle peak area of five replicate injections of standard preparation should not be more than 2.0%.

Conclusion:

Results met acceptance criteria. Hence, the method is precise.

5.4.6.2 Method precision:

The results of method precision for Dolutegravir, Lamivudine and Tenofovir AF in Tables 5.29. The %RSD for method precision of Dolutegravir, Lamivudine and Tenofovir AF were found to be 0.83,0.61 and 0.83 respectively.

Registrar
Swarrnim Startup & Innovation University
At : Boyan Rathod, Gandhinagar.

Table 5.29: Result of method precision for Dolutegravir, Lamivudine and Tenofovir AF

Sr. No.	Peak Area for Dolutegravir	Peak Area for Lamivudine	Peak Area for Tenofovir AF
1	1924380	5122246	415511
2	1895464	5059504	420592
3	1880749	5095478	415693
4	1898629	5074583	423625
5	1903001	5126244	415505
6	1918149	5054771	420499
Mean	1900445	5095611	418185
SD	15853.47	30931.00	3475.38
%RSD	0.83	0.61	0.83

Acceptance criteria:

% RSD of the results of six sample solutions should not be more than 2.0.

Conclusion:

% RSD are achieved as per acceptance criteria.Hence, the method is precise.

5.4.6.3 Intermediate precision(n=6):

The results of intermediate precision for Dolutegravir, Lamivudine and Tenofovir AF in tables 5.30,5.31 and 5.32 respectively. The %RSD for intermediate precision of Dolutegravir, Lamivudine and Tenofovir AF were found to be 0.58,0.80 and 0.67.

Table 5.30: Result of intermediate precision for Dolutegravir, Lamivudine and Tenofovir AF

Sample No.	Peak Area for Dolutegravir	Peak Area for Lamivudine	Peak Area for Tenofovir AF
1	1905682	5212342	100.15
2	1892594	5138524	100.45
3	1915482	5139562	100.66
4	1905374	5131987	101.61
5	1885375	5214962	100.17
6	1908169	5125487	101.63
Mean	1900901	5167475	100.78
SD	11041.28	41506.49	0.68
%RSD	0.58	0.80	0.67

Registrar
Swarnim Startup & Innovation University
At : Boyan Rathod, Gandhinagar.

Table 5.31: Comparision of method pecision and intermediate precision for Dolutegravir, Lamivudine and Tenofovir AF

Sample No.	Peak Area for Dolutegravir	Peak Area for Lamivudine	Peak Area for Tenofovir AF
1	1924380	5122246	415511
2	1895464	5059504	420592
3	1880749	5095478	415693
4	1898629	5074583	423625
5	1903001	5126244	415505
6	1918149	5054771	420499
7	1905682	5212342	100.15
8	1892594	5138524	100.45
9	1915482	5139562	100.66
10	1905374	5131987	101.61
11	1885375	5214962	100.17
12	1908169	5125487	101.63
Mean	1900901	5167475	101
SD	11041.28	41506.49	0.68
%RSD	0.58	0.80	0.67

Acceptance criteria:

% RSD of the assay results of six sample solutions should not be more than 2.0.

% RSD of the assay results of twelve sample solutions (Six from method precision and six from intermediate precision) should not be more than 2.0.

Conclusion:

% RSD are achieved as per acceptance criteria.Hence, the method is precise.

5.4.7 Robustness(n=6)

Results of robustness studies of RP-HPLC method are shown in Table 7.32, 7.33 and 5.34 respectively.

Registrar
Swarrnim Startup & Innovation University
At : Boyan Rathod, Gandhinagar.

Table 5.32 Robustness data for Dolutegravir

Chromatographic condition		Mean Area ±SD	% RSD
Flow rate ± 0.10 mL/min	0.9	1867504± 17256.03	0.92
	1	1903531 ± 18209.02	0.96
	1.1	1921160± 14742.38	0.77
Wavelength ±2 nm	258 nm	1881369± 14487.66	0.77
	260 nm	1897026 ± 12027.68	0.63
	262 nm	1888929± 12389.90	0.66
Change in organic phase ration of Mobile phase-B (±5%) For (+5%): Water:Acetonitrile: Trifluoroacetic acid (280:720:1, v/v/v/)	(-5)%	1864671 ± 9682.34	0.52
	As such	1893569± 10175.68	0.54
For (-5%): Water:Acetonitrile:Trifluoroacetic acid (280:720:1, v/v/v/)	(+5)%	1902400± 17817.92	0.94

Registrar
Swarrnim Startup & Innovation University
At : Boyan Rathod, Gandhinagar.

Table 5.33 Robustness data for Lamivudine

Chromatographic condition		Mean Area±SD	% RSD
Flow rate ± 0.10 mL/min	0.9	5097366± 26832.21	0.53
	1	5125743± 25788.02	0.50
	1.1	5148031± 29251.08	0.57
Wavelength ±2 nm	258 nm	5113313± 26272.06	0.51
	260 nm	5138901± 31909.06	0.62
	262 nm	5152859± 25729.60	0.50
Change in organic phase ration of Mobile phase-B (±5%)	(-5)%	5135257 ± 28321.14	0.55
For (+5%): Water:Acetonitrile: Trifluoroacetic acid (240:760:1, v/v/v/)	As such	5137848± 33628.58	0.65
For (-5%): Water:Acetonitrile:Trifluoroacetic acid (160:840:1, v/v/v/)	(+5)%	5132681± 26950.00	0.53

Registrar
Swarrnim Startup & Innovation University
At : Boyan Rathod, Gandhinagar.

Table 5.34 Robustness data for Tenofovir AF

Chromatographic condition		Mean Area ± SD	% RSD
Flow rate ± 0.10 mL/min	0.9	411844± 2210.24	0.54
	1	417265± 2882.41	0.69
	1.1	414837± 2421.37	0.58
Wavelength ±2 nm	258 nm	412824± 2236.12	0.54
	260 nm	415342± 2765.20	0.67
	262 nm	416434± 2136.42	0.61
Change in organic phase ration of Mobile phase-B (±5%) For (+5%): Water:Acetonitrile: Trifluoroacetic acid (240:760:1, v/v/v/)	(-5)%	411895± 2374.00	0.58
	As such	413102± 2158.09	0.52
For (-5%): Water:Acetonitrile:Trifluoroacetic acid (160:840:1, v/v/v/)	(+5)%	415306± 2302.70	0.55

Acceptance criteria:

% RSD of principle peak area of five replicate injections of sample preparation should not be more than 2.0%.

Conclusion:

% RSD are achieved as per acceptance criteria.Hence, the method is precise.

Registrar
Swarrnim Startup & Innovation University
At : Boyan Rathod, Gandhinagar.

5.5 Assay results:

Table 5.35 % Assay data for Dolutegravir, Lamivudine and Tenofovir Alafenamide Fumarate

Sr.no	Dolutegravir	Lamivudine	Tenofovir Alafenamide Fumarate
1	98.67	100.12	101.77
2	99.40	100.88	100.04
3	98.90	101.17	101.50
4	98.86	101.58	99.71
5	97.64	100.56	101.71
6	98.70	101.98	100.36
Mean	98.69	101	101
SD	0.58	0.68	0.92
RSD	0.59	0.67	0.91

Acceptance criteria:

% Assay should be between 98.0% & 102.0%.

Conclusion:

% Assay meets acceptance criteria.

Registrar
Swarrnim Startup & Innovation University
At : Boyan Rathod, Gandhinagar.

5.6 Summary table:

Table 5.36 Summary of validation parameters

Parameters		Results		
		Dolutegravir	**Lamivudine**	**Tenofovir AF**
System Suitability Test (%RSD)		0.53	0.50	0.59
Specificity		No interference was found from blank and placebo solution		
Linearity (R^2 Value)		0.9994	0.9995	0.9992
LOD (µg/mL)		0.4562	4.9463	0.2455
LOQ(µg/mL)		1.3824	14.9889	0.7440
Accuracy (n=3) (%RSD)	50%	0.66	0.50	0.51
	100%	0.62	0.56	0.51
	150%	0.57	0.55	0.50
Precision (%RSD)				
System precision		0.81	0.88	0.91
Method precision		0.83	0.61	0.83
Intermediate precision		0.58	0.80	0.67
Robustness (%RSD)				
Flow rate (0.10 mL/min)	0.9	0.92	0.53	0.54
	1	0.96	0.50	0.69
	1.1	0.77	0.57	0.58
Wavelength (±2 nm)	258 nm	0.77	0.51	0.54
	260 nm	0.63	0.62	0.67
	262 nm	0.66	0.50	0.61
Change in organic phase ration of Mobile phase-B (±5%)	(-5)%	0.52	0.55	0.58
	As such	0.54	0.65	0.52
	(+5)%	0.94	0.53	0.55

Registrar
Swarrnim Startup & Innovation University
At : Boyan Rathod, Gandhinagar.

6 Summary and conclusion

6.1.1 Summary

- Dolutegravir, lamivudine and tenofovir alafenamide fumarate tablets, a combination of dolutegravir (integrase strand transfer inhibitor [INSTI]), lamivudine, and tenofovir alafenamide fumarate (both nucleoside reverse transcriptase inhibitors), is indicated as a complete regimen for the treatment of HIV-1 infection.
- Dolutegravir,Lamivudine and Tenofovir alafenamide combination is approved by CDSCO on 02/06/2022. Dolutegravir, Lamivudine and Tenofovir alafenamide combination is not official in BP, EP, IP and USP.
- A aasay method for analysis of Dolutegravir, lamivudine and tenofovir alafenamide fumarate tablets has been developed and validated. The chromatographic separation was achieved on Waters X-Bridge, 150 x 4.6 mm, 5 µm coloumn using a gradient mode by mobile phase-A Water:TFA (1000:1%v/v) and Water:Acetonitrile:TFA (200:800:1%v/v) at flowrate of 1 mL/min.The UV detevtion wavelength was carried out on 260 nm for Dolutegravir,Lamivudine and Tenofovir alafenamide Fumarate,Injection volume was 10 µL
- Specificity of the method was established by determining the peak purity of the drug in samples using PDA detector. Data suggests that peak purity angle was found to be less than peak purity threshold, So the peaks due to Dolutegravir, Lamivudine and Tenofovir AF is well resolved from any other peak due to placebo and blank solution. Hence the method is specific.
- For the linearity, Correlation coefficient value should be greater than 0.99 for given range. Correlation coefficient value were found to be 0.9994 for Dolutegravir,0.9995 for Lamivudine and Tenofovir AF 0.9992 respectively which is greater than 0.99. Hence, the method is linear within the range.
- Accuracy was determined over the range from lowest sample concentration to highest concentration at (50%, 100%,150%). According to acceptance criteria % recovery at each level for individual sample should be between 98 to 102 %. % recovery for Dolutegravir at 50% was 99.04, 100% level 99.96 and 150% level 100.06, Lamivudine at 50% level 99.86, 100% level 100.08 and 150% level 99.98 and Tenofovir AF at 50% level 99.86, 100% level 100.08 and 150%

Registrar
Swarrnim Startup & Innovation University
At : Boyan Rathod, Gandhinagar.

level 99.98 respectively which is well within the acceptance criteria. Hence the method can be termed as accurate.

- In order to show that the precision of the system, method precision and intermediate precision were carried out. For the system precision %RSD were found 0.81,0.88 and 0.91 respectively for Dolutegravir,Lamivudine and Tenofovir AF.. For the method precision %RSD were found 0.83,0.61 and 0.83 respectively for Dolutegravir,Lamivudine and Tenofovir AF. For the intermediate precision % RSD were found 0.83,0.61 and 0.80.58,0.80 and 0.67 respectively for Dolutegravir,Lamivudine and Tenofovir AF. % RSD was found less than 2%
- .Hence,the method is precise.
- Robustness is performed to prove the efficiency of the method despite deliberate changes in the normal conditions i.e change in flow rate, wavelength, Change in organic phase ration of Mobile phase-B (±5%) etc. According to acceptance criteria %RSD should not be more than 2%. The results obtained are well within acceptance criteria. Hence the method can be termed as robust.
- Since the results are well within the limit of acceptance criteria for all validation parameters, therefor the method can be considered as validated and suitable for intended use. So, the proposed developed asssay method can be successfully applies for analytical method development and validation of Dolutegravir, Lamivudine and Tenofovir AF in pharmaceutical dosage form by RP- HPLC.

6.1.2 Conclusion

- The above developed asaay method was successfully validated in terms of specificity, linearity, accuracy, precision and robustness. The method was found to be simple, specific, linear, accurate, precise and robust. Thus, above developed assay method can be applied for routine quantitative analysis for of Dolutegravir, Lamivudine and Tenofovir AF in tablet dosage form.

Registrar
Swarrnim Startup & Innovation University
At : Boyan Rathod, Gandhinagar.

7 References

[1]“Introduction to Dolutegravir, Lamivudine and Tenofovir Alafenamide tablets”, Dcember 2023, https://www.accessdata.fda.gov/drugsatfda_docs/pepfar/210865PI.pdf

[2]“Introduction to HIV-1”, Dcember 2023, https://www.isentress.com/what-is-hiv-1/ [3]“Symptoms”, December 2023, https://www.pennmedicine.org/for-patients-and- visitors/patient- information/conditions-treated-a-to-z/aids-and-hiv

[4]“Classification of Drugs used in HIV Treatment”, December 2023, https://www.medicalnewstoday.com/articles/324013#drug-types

[5] Snyder L., Kirkland J., and Glajch J. Practical HPLC Method Development; 2nd Edn; Wiley, New York, 1997, pp 234-295.

[6] Sadek PC. Troubleshooting HPLC systems; 1st Edn; John Wiley and Sons, New York, 2000, pp 71-100.

[7] Ahuja S., and Michael WD. Hand book of pharmaceutical analysis by HPLC; 1st Edn; Elsevier Academic Press, 2005, pp 47-61.

[8] Sethi P. High performance liquid chromatography : Quantitative analysis of pharmaceutical formulation; 1st Edn; CBS Publication and Distributors, New Delhi, 2001, pp 141.

[9] Skoog DA., Holler FJ., and Crouch SR. Fundamentals of Analytical Chemistry; 8th Edn; Thomson Books, New York, 2010, pp 970-998.

[10] Engelhardt H., and Aitzetmuller K. Practice of High Performance Liquid Chromatography; 1st Edn; Springer, New York, 1986, pp 71-75

[11] Snyder LR., Kirkland JL., and Glajch JL. Practical HPLC Method Development; 2nd Edn; Wiley, New York, 1997, 234-295.

[12] Sadek PC. Troubleshooting HPLC systems; 1st Edn; John Wiley and Sons, NewYork, 2000, pp 71-100.

[13] Ahuja S., and Michael WD. Hand book of pharmaceutical analysis by HPLC; 1st Edn; Elsevier Academic Press, 2005, pp 47-61.

[14] Braithwaite A., and Smith FJ. Chromatographic Methods; 5th Edn; Kluwer Academic Publisher, Boston, 1996, pp 267-270.

[15] Skoog DA., Holler FJ., and Crouch SR. Fundamentals of Analytical Chemistry; 8th Edn; Thomson Books, New York, 2010, pp 970-998.

[16] Engelhardt H., and Aitzetmuller K. Practice of High Performance Liquid

Registrar
Swarrnim Startup & Innovation University
At : Boyan Rathod, Gandhinagar.

Chromatography; 1st Edn; Springer, New York, 1986, pp 71-75

[17] Yadav V, Bharkatiya M. A Review on HPLC Method Development and Validation. Research Journal of Life Sciences, Bioformatics, Pharmaceutical and Chemical Sciences.

[18] Bhardwaj S, Dwivedia K and Agarwala D. A Review: HPLC Method Development and Validation. International Journal of Analytical and Bioanalytical Chemistry [19]Sood S, Bala R, Gill . Method development and validation using HPLC technique

– A review. Journal of Drug Discovery and Therapeutics 2 (22) 2014, pp 18-24.

[20]Pratap B. et al. Importance of RP-HPLC in Analytical method

development: A review. International journal of novel trends in pharmaceutical sciences 2013; 3(1): pp 15-23.

[21]Lindholm J. Development and Validation of HPLC method for Analytical and Preparative Purpose. Acta Universities Upsaliensis Uppsala. 2004; pp 13-14. [22]Snyder L, Kirkland J, Glach J. Practical HPLC Method Development, 2nd edition.

New York. John Wiley &Sons. 1997; pp 233-291

[23] Charde M, Welankiwar A, Kumar J, Method development by liquidchromatography with validation. International Journal of Pharmaceutical Chemistry. 2014; 4(2);pp 57-61

[24] Rao G, Goyal A. An Overview on Analytical Method Development and Validation by Using HPLC. The Pharmaceutical and Chemical Journal, 2016; 3(2): pp 280-289. [25]Noman A, Bukhaiti ALWedad Q, Alfarga A, AbedSherif M, Mahdi A. And Waleed

A. HPLC technique used in food analysis-Review. International Journal of Agriculture Innovations and Research. 2016; 5(2); pp 181-188

[26] Sethi PD. Introduction – High Performance Liquid Chromatography, 1st edn, CBS Publishers, New Delhi. 2001; pp 1-28.

[27] FDA Guidance for Industry (2000)-Analytical Procedures and Method Validation, Chemistry, Manufacturing, and Controls Documentation, Center for Drug Evaluation and Research (CDER) and Center for Biologics Evaluation and Research (CBER). [28]Julia T,Mena A, Aucoin M, Kamen A. Development and validation of a HPLC method for the quantification of baculovirus particles. J

Registrar
Swarrnim Startup & Innovation University
At : Boyan Rathod, Gandhinagar.

Chromatogr B. 2011; 879: pp 61-68

[29] Santhosh G,Nagasowjanya G, Ajitha A, Uma Maheswara Rao Y. HPLC method development and validation: an overview.International Journal of Pharmaceutical Research & Analysis. 2014; 4(2): pp 274-280.

[30] Kayode J, Adebayo. Effective HPLC method development. Journal of Health, Medicine and Nursing.2015; 12: pp 123-133.

[31] Gad S. Pharmaceutical manufacturing handbook of regulations and quality. John wiley and sons; 2006

[32] Webster P. Analytical procedures and method validation. Enviormental protection agency; 2001

[33] Snyder L, Kirkland J., and Glajch J. Practical HPLC Method Development; 2nd Edn; Wiley, New York, 1997, pp 234-295.

[34] Sadek PC. Troubleshooting HPLC systems; 1st Edn; John Wiley and Sons, New York, 2000, pp 71-100.

[35] ICH, Q2(R1) "Validation of Analytical Procedure" Methodology, International Conference on Harmonization, IFPMA, Geneva, Switzerland, 2005.

[36] "Clinical Rational of Dolutegravir,Lamivudine and Tenofovir Alafenamide",December 2023, https://ww3w.poz.com/basics/hiv-basics/taf-versus- tdf-difference

[37] Clinical Rational of Dolutegravir,Lamivudine and Tenofovir Alafenamide",December 2023, https://www.poz.com/basics/hiv-basics/taf-versus-tdfdifference#:~:text=TAF%20and%20its%20coformulations%20are,fat%20levels%2 0and%20weight%20gain.

[38] "Clinical Rational of Dolutegravir,Lamivudine and Tenofovir Alafenamide",December 2023, https://www.pharmacytimes.com/view/what-every- pharmacist-should-know-about-tenofovir-alafenamide

[39] "Clinical Rational of Dolutegravir,Lamivudine and Tenofovir Alafenamide",December 2023, https://pubmed.ncbi.nlm.nih.gov/32087795/

[40]"Drug profile of Dolutegravir sodium", November 2023, https://go.drugbank.com/salts/DBSALT000943

Registrar
Swarrnim Startup & Innovation University
At : Boyan Rathod, Gandhinagar.

[41] "Drug profile of Dolutegravir sodium", November 2023, https://pubchem.ncbi.nlm.nih.gov/compound/54726191

[42] "Drug profile of Lamivudine", November 2023, https://go.drugbank.com/drugs/DB00709

[43] "Drug profile of Lamivudine", November 2023, https://www.rxlist.com/epivir- drug.htm

[44] "Drug profile of Tenofovir Alafenamide Fumarate", November 2023, https://analyticachemie.in/product/tenofovir-alafenamide-fumarate/

[45] "Drug profile of Tenofovir Alafenamide Fumarate", November 2023, https://www.ncbi.nlm.nih.gov/books/NBK533928/#:~:text=Tenofovir%20alafenamide%20(TAF)%20is%20a,adults%20with%20compensated%20liver%20disease

[46]"Drug profile of Tenofovir Alafenamide Fumarate", November 2023,https://pubchem.ncbi.nlm.nih.gov/compound/Tenofovir-Alafenamide-Fumarate

[47]Indian Pharmacopoeia,Govt. of India, Ministry of Health and Family Welfare the Indian Pharmacopoeia Commision,Ghaziabad, 9th ed. 2022, pp 2155-2157

[48] Indian Pharmacopoeia,Govt. of India, Ministry of Health and Family Welfare the Indian Pharmacopoeia Commision,Ghaziabad, 9th ed. 2022, pp 2157-2159

[49]Indian Pharmacopoeia, Vol-2. New Delhi: Govt. of India, Ministry of Health and Family Welfare; 2022, pp 2692-2693

[50] Indian Pharmacopoeia,Govt. of India, Ministry of Health and Family Welfare the Indian Pharmacopoeia Commision,Ghaziabad, 9th ed. 2022, pp 2693-2694

[51] Indian Pharmacopoeia,Govt. of India, Ministry of Health and Family Welfare the Indian Pharmacopoeia Commision,Ghaziabad, 9th ed. 2022,pp 2695

[52] Indian Pharmacopoeia,Govt. of India, Ministry of Health and Family Welfare the Indian Pharmacopoeia Commision,Ghaziabad, 9th ed. 2022,pp 3740-3743

Registrar
Swarrnim Startup & Innovation University
At : Boyan Rathod, Gandhinagar.

[53] Indian Pharmacopoeia,Govt. of India, Ministry of Health and Family Welfare the Indian Pharmacopoeia Commision,Ghaziabad, 9th ed. 2022,pp 3743-3745

[54] Indian Pharmacopoeia,Govt. of India, Ministry of Health and Family Welfare the Indian Pharmacopoeia Commision,Ghaziabad, 9th ed. 2022,pp 2695-2697

[55]MR G,et al, "RP-HPLC and HPTLC Method development and validation for estimation of Dolutegravir in bulk and tablet Dosage Form." *IDMA*. **2019**, 56, 30. [56]Chauhan K, et al, "Development and validation of RPHPLC method for Dolutegravir in bulk and solid dosage form." *JETIR* . **2020**, 7, 811-816.

[57]Dulange V, et al, "Development and Validation of RP-HPLC Method for the estimation of Dolutegravir in Bulk and Pharmaceutical Dosage Form." *IJARESM*. **2023**, 11,594-599.

[58]Bhavar G, et al, "High-Performance Liquid Chromatographic for Quantitative Estimation of Dolutegravir Sodium in Bulk Drug and Pharmaceutical Dosage Form."*Sci. Pharm*. **2016**, 84, 305-320.

[59]Karemore H, More H, Choudhry S, Shende S, Karemore D, "Assay Method Development And Validation Of Drug In Its Formulation By Hplc." *J. Pharm. Negat. Results*. **2022** , 4630-43.

[60]Dayaramani RA, Patel PU, Patel NJ, "Development nd validation of RP-HPLC method for estimation of Lamivudine in bulk and in tablet formulation." *IJPBS*. **2019**, 13, 15.

[61]Trinayani K, Aminabee S, Sandhyarani A, Bharghava P, Kumar KS, "Method development for the estimation of Lamivudine in pure and Formulation by RP-HPLC method." *Int. J. Pharm. Sci*. **2012**;1

[62]Aneela S, De S, "Development and validation of RP-HPLC method for determination of lamivudine from pharmaceutical preparation." *IJPT*. **2011**, 11, 37-42. [63]Singh AV, Nath LK, Pani NR, "Development and validation of analytical method for the estimation of lamivudine in rabbit plasma." *J. Pharm. Anal*. **2011**, 1, 251-257. [64]Chhabra GS, Rajora A, Mishra DK, "Stability indicating RP-HPLC method for the determination of Tenofovir in pharmaceutical formulation." *RJPT*. **2021**, 14 ,6335-9. [65]Wankhade AJ, Hamrapurkar PD, "Development and Validation of Quality by Design based RP-

Registrar
Swarrnim Startup & Innovation University
At : Boyan Rathod, Gandhinagar.

HPLC Method for determination of Tenofovir Alafenamide Fumarate from Bulk drug and Pharmaceutical dosage." *RJPT*. **2022**, 15, 2127-34. [66]Venkatesh P, Kulandaivelu U, Rao GK, Chakravarthi G, Alavala RR, Rajesh B. A, "Novel UPLC-PDA stability indicating method development and validation for the simultaneous estimation of lamivudine and dolutegravir in bulk and its tablets'" *J. Pharm. Res. Int.*. **2020**, 32, 52-60.

[67] Godela R, "An effective stability indicating RP-HPLC method for simultaneous estimation of Dolutegravir and Lamivudine in bulk and their tablet dosage form." *Futur. J. Pharm. Sci.*. **2020**, 6, 1-9.

[68] Dhanwate SS, Pachauri AD, Ghode PD, Khandelwal KR, "Development and validation of analytical method for the estimation of lamivudine and dolutegravir sodium in dosage form." *J. Pharm. Sci. Res*. **2019,** 11,2886-90.

[69] Noorbasha K, Nurbhasha S, "A new validated stability-indicating RP-HPLC method for simultaneous quantitation of dolutegravir and lamivudine in bulk and pharmaceutical dosage form". *Futur. J. Pharm. Sci.*. **2020,**6, 1-0.

[70] Nerella VK, Nataraj KS, Prasanthi T, "RP-UHPLC Method Development and Validation for Simultaneous Estimation of Tenofovir and Dolutegravir in Bulk and Pharmaceutical Dosage Form". 1st National Conference on Design Thinking: Trans- Disciplinary Challenges & Opportunities, 2023.

[71] Rao NM, Sankar DG, "Development and validation of stability-indicating HPLC method for simeltaneous determination of Lamivudine, Tenofovir, and Dolutegravir in bulk and their tablet dosage form." *Futur. J. Pharm. Sci*. **2015**, 1, 73-7.

[72] Nekkala K, Kumar VS, Ramachandran D, "Development and validation for the simultaneous estimation of lamivudine, tenofovir disproxil and dolutegravir in drug product by RP-HPLC." *J. Pharm. Sci. Resarch*. **2017**, 9, 1505.

[73] Kota AK, Annapurna MM, "A new Stability-indicating UHPLC for the simultaneous determination of a combination of Anti-viral drugs: Dolutegravir sodium, Lamivudine and Tenofovir disoproxil fumarate." *RJPT*. **2022**, 15, 3823-30. [74]Mastanamma SK, Jyothi JA, Saidulu P, Varalakshmi M, "Development and Validation of RP-HPLC Method for the Simultaneous Estimation of Lamivudine, Tenofovir Alafenamide and Dolutegravir Bulk and their Combined Dosage." *Pharm. Methods* **2018**, 9, 49-55.

Registrar
Swarrnim Startup & Innovation University
At : Boyan Rathod, Gandhinagar.

*[75]*Nagamalleswari G, Shankar MU, “Stability Indicating Technique And Validation For Dolutegravir, Lamivudine And Tenofovir Disoproxil Fumarate By UPLC.” *J. Pharm. Negat. Results*. **2023**, 14, 58-63

[76] Omoteso OA, Milne M, Aucamp M,“The Validation of a Simple, Robust, Stability- Indicating RP-HPLC Method for the Simultaneous Detection of Lamivudine, Tenofovir Disoproxil Fumarate, and Dolutegravir Sodium in Bulk Material and Pharmaceutical Formulations.” *Int. J. Anal. Chem*. **2022**,2022,1-17.

[77] Thakare B, Mittal A, Charde M, Umbarkar R, Kohle N, Chandra P, Kadam M. “Development and Validation of Stability-indicating assay UHPLC Method for Simultaneous analysis of Dolutegravir, Lamivudine and Tenofovir disoproxil fumarate in Bulk and Pharmaceutical Formulation.” *RJPT*. 2022;15(9):4061-6.

[78] Ghode PD, Sayare AS, Pachauri AD, Tankar A, Shinde SU, Saindane DS, Tembhurnikar V, Ghode SP, “RP-HPLC method development and validation for the simultaneous estimation of dolutegravir, emtricitabine, and tenofovir alafenamide in tablet dosage form.” *JMPAS*. **2022**, 11, 4734 – 4740.

[79] Veeraswami B, Naveen VM, “Development and validation of RP-HPLC method for the estimation of dolutegravir and rilpivirine in bulk and pharmaceutical dosage form and its application to rat plasma.” *Asian J Pharm Clin Res* **2019**, 12, 267-271. [80]Patel H, Shah MP, Gajera MR, Patel HD, “Stability indicating hplc method development and validation for simultaneous estimation of Emtricitabine, Dolutegravir

and Tenofovir alafenamide in their combined pharmaceutical dosage form.” *J. High. Educ.* **2021**, 13, 548-567.

[81]Ranjith K, Rao MB, Murthy TE, “RP-HPLC development and validation of assay and uniformity of dosage units by content uniformity for in house Lamivudine and Abacavir combined tablet.” *IJRPB*. **2013**, 1, 682.

[82]Thejomoorthy K, “A New Stability Indicating Analytical Method Development And Validation for The Quantitative Determination of Emitricitabine And Lamivudine By RP-HPLC.” *WJCMPR*. **2020,** 2, 184-90.

[83]Chava S, et al. Process for the preparation of dolutegravir and pharmaceutically acceptable salts thereof. United State US 10301321B2 2020

[84]Liu D, Tenofovir alafenamide hemifumarate. United State US 8754065B2

Registrar
Swarrnim Startup & Innovation University
At : Boyan Rathod, Gandhinagar.

2014 [85]Venkateshwaran C, et al. Methods and compositions for treating viral or virally- induced conditions. United State US 10857152B2 2020

[86] Ramanathan S, Pharmaceutical formulations comprising tenofovir and emtricitabine. Australian AU 2021202009B2 2023

[87] Ramakoteswara R, Novel polymorphs of lamivudine. WIPO WO 2008114279A2 2008

[88] "Checking melting point". December 2023, https://go.drugbank.com/salts/DBSALT000943

[89] "Checking melting point". December 2023, https://go.drugbank.com/drugs/DB08930

[90] "Checking melting point". December 2023,https://analyticachemie.in/product/tenofovir-alafenamide-fumarate/

[91] "IR Spectral Determination For Identification Of Dolutegravir, Lamivudine And Tenofovir Alafenamide"December 2023, https://www.sigmaaldrich.com/IN/en/technical-documents/technicalarticle/analytical- chemistry/photometry-and-reflectometry/ir-spectrum-table

Sr. No. swarrnim/RO/utilization/2021/37

Date: 09/08/2021

Statement of Expenditure/Utilization certificate

This is to certify that the research project sanctioned to **Dr. Amita Mishra, Swarrnim Science college, Swarrnim Startup and Innovation University, Gandhinagar, Gujarat,** in the academic year 2021-22 has been utilized as per the following details:

Title of Project	Amount Sanctioned in (Rs)	Amount disbursed in (Rs)		Actual Expenditure in (Rs)
		2021-2022	2022-2023	
Method Development And Validation Of Dolutegravir, Lamivudine And Tenofovir Alafenamide Fumarate In Tablet Dosage Form By RP-HPLC	758416	357000	180000	537000

SWARRNIM STARTUP & INNOVATION UNIVERSITY ACCOUNT SECTION

Accounts/Finance officer

Swarrnim Startup and Innovation University

Date: 11/11/2019

To,

Swarrnim Science college,

Bhoyan Rathod, Opposite IFFCO,

Near ONGC WSS, Adalaj Kalol Highway,

Gandhinagar, Gujarat - 382422.

Subject: Sanction Letter of Research Project

Dear Researcher,

I am pleased to inform you that the scrutiny committee has approved your research. The details of the Research Proposal and Sanctioned grant is as under.

Title of Research Proposal	Mathematical Modeling in Population Dynamics
Name of Principal investigator	Prem Prajapati
Name of Co-investigators	Dr. Amita Mishra, Dr. Archana Pandey, Dr. Priti Mahla, K M Sachin, Karnav Patel
Duration in months	12
Sanctioned Grant for Research Work	600000

It is further hereby informed that you will abide to follow all the guidelines/norms, terms, and conditions mentioned in the Research Scheme of company. The principal investigator may contact for any further assistance. All the best for great research work ahead.

With Regards

Registrar
Swarrnim Startup & Innovation University
At : Boyan Rathod, Gandhinagar.

Swarrnim Startup & Innovation University Bhoyan Rathod, Gandhinagar

Ragin Ravindrabhai Shah

SPECHROM SOLUTIONS AHMEDABAD

“Mathematical Modeling in Population Dynamics”

Research Project Report Submitted to

Spechrom Solutions

Submitted by:

Principal Investigator: Prem Prajapati, Head,Assistant Professor, Science, Swarrnim Science college, Swarrnim Startup & Innovation University

Co investigator: Dr. Amita Mishra, Dr. Archana Pandey, Dr. Priti Mahla, K M Sachin, Karnav Patel

Sr. No.	Index	Page Number
1	Abstract	3
2	Abbreviations	3
3	Introduction	3
4	Review of Literature	4
5	Objective and Plan of Work	5
6	Material and Methods	6
7	Result and Discussion	7
8	Summary and Conclusion	9
9	Bibliography	9

Abstract
Mathematical modeling is a powerful tool for understanding and predicting the behavior of complex systems. This project explores mathematical modeling in the context of population dynamics, focusing on models that describe the growth and interaction of populations. We review classical models such as the exponential and logistic growth models, as well as more complex models like the Lotka-Volterra predator-prey equations. The project highlights the importance of model assumptions and parameters, and discusses the implications of model results for real-world population management.

Abbreviations
ODE: Ordinary Differential Equation
PDE: Partial Differential Equation
LV: Lotka-Volterra

Introduction
Mathematical modeling is an essential tool in various fields of science, engineering, and economics. In the context of biology and ecology, models provide insights into the dynamics of populations, species interactions, and the impact of environmental factors on biological systems. Population dynamics is a branch of biology that studies the size and age composition of populations as dynamical systems, as well as the biological and environmental processes driving them. This project aims to explore mathematical models used to describe population dynamics, highlighting their applications, limitations, and implications.

Mathematical Modeling in Population Dynamics is a field that uses mathematical equations and concepts to describe and predict how populations of organisms grow, interact, and evolve over time. This branch of mathematics is particularly important in ecology and biology, where understanding the dynamics of species populations is crucial for conservation, resource management, and studying the impact of environmental changes.

In population dynamics, models often take the form of differential equations that describe the rate of change in population size over time. These models can be simple, such as the exponential growth model, where a population grows at a constant rate without any environmental limits, or more complex, like the logistic growth model, which introduces a carrying capacity, reflecting the maximum population size that the environment can sustain.

More sophisticated models, such as the Lotka-Volterra equations, capture interactions between different species, such as predators and prey. These models reveal the cyclical

nature of population sizes in predator-prey relationships and help ecologists understand how changes in one species can impact another.

Mathematical modeling in population dynamics is not just about predicting future population sizes; it also provides insights into the stability of ecosystems, the impact of environmental changes, and the effectiveness of conservation strategies. By adjusting model parameters, researchers can explore different scenarios, such as the effects of habitat destruction, climate change, or introduction of invasive species, helping to inform decisions in environmental policy and management.

Review of Literature

The study of population dynamics has a rich history, with early contributions from Malthus, who introduced the concept of exponential growth. Later, Verhulst proposed the logistic growth model, which accounts for the carrying capacity of the environment. The Lotka-Volterra model further advanced the field by modeling the interaction between predator and prey species. Recent studies have expanded these classical models to include factors such as age structure, spatial distribution, and stochastic effects. This review covers key developments in population dynamics modeling and highlights important research that has shaped the field.

The field of population dynamics has evolved significantly since its inception, with foundational contributions that have shaped our understanding of how populations grow and interact.

1. **Thomas Malthus and Exponential Growth**: In the late 18th century, Thomas Malthus introduced the concept of exponential growth, positing that populations, when unchecked, grow exponentially while resources grow linearly. Malthus's work laid the groundwork for understanding how populations can outstrip their resources, leading to competition and eventual decline.

2. **Pierre-François Verhulst and the Logistic Growth Model**: In the 19th century, Pierre-François Verhulst refined Malthus's ideas by introducing the logistic growth model. This model incorporates the concept of a carrying capacity—the maximum population size that an environment can sustain indefinitely. The logistic model is characterized by an initial phase of exponential growth, which slows as the population approaches its carrying capacity, eventually stabilizing.

3. **Lotka-Volterra Predator-Prey Model**: In the early 20th century, Alfred Lotka and Vito Volterra independently developed what is now known as the Lotka-Volterra equations. These equations describe the interactions between predator and prey populations, showing how these interactions can lead to cyclical fluctuations in population sizes. This model was one of the first to capture the dynamics of

species interactions, providing insights into the stability and oscillatory nature of ecosystems.

4. **Advancements in Population Dynamics**: In recent decades, population dynamics models have become increasingly sophisticated. Researchers have expanded classical models to incorporate factors such as:

   Age Structure: Models that take into account the distribution of individuals across different age groups, which can influence birth and death rates.

   Spatial Distribution: The inclusion of spatial effects, where population dynamics are influenced by the movement of individuals across different regions or habitats.

   Stochastic Effects: The consideration of randomness and variability in population processes, recognizing that real-world populations are often subject to unpredictable changes.

5. **Modern Developments**: Contemporary research in population dynamics often integrates these factors into complex, multi-species models. These models are used to study a wide range of ecological phenomena, from the spread of invasive species to the impact of climate change on biodiversity. Additionally, computational methods have become crucial for simulating population dynamics, allowing researchers to explore scenarios that are difficult to study experimentally.

This review highlights the key developments in population dynamics modeling, showing how the field has progressed from simple growth models to intricate frameworks that account for a variety of biological and environmental factors. These advancements have been instrumental in shaping current ecological theory and guiding conservation efforts.

Objective and Plan of Work

Objective:

The primary objective of this project is to explore and analyze key mathematical models used in the study of population dynamics. By focusing on the exponential growth model, the logistic growth model, and the Lotka-Volterra predator-prey model, the project aims to understand the underlying assumptions of these models, solve the equations that define them, and interpret the results in the context of real-world biological and ecological systems.

Plan of Work:

1. **Literature Review**: Begin with a comprehensive review of both classical and contemporary literature on population dynamics models. This will provide a historical context and identify recent advancements in the field.

2. **Model Derivation and Solution**: Derive the fundamental equations for the exponential growth model, the logistic growth model, and the Lotka-Volterra predator-prey model. Solve these equations analytically to understand the behavior of populations over time.

3. **Stability and Behavior Analysis**: Analyze the stability of the models under various conditions, such as different parameter values and initial population sizes. Investigate how small changes in these conditions can lead to different outcomes, such as steady states, cycles, or population collapse.

4. **Discussion of Implications**: Discuss the broader implications of the model results, particularly how they can inform our understanding of biological and ecological systems. Consider how these models can be applied to real-world scenarios, such as wildlife conservation, resource management, and the study of invasive species.

Material and Methods

The project primarily involves the analytical and numerical study of ordinary differential equations (ODEs) that describe population dynamics. We will use methods from calculus, linear algebra, and dynamical systems theory to derive and analyze the models. Software tools such as MATLAB or Python will be employed for numerical simulations and visualization of model behavior. The analysis will focus on the stability of equilibria, phase plane analysis, and bifurcation theory to understand how changes in parameters affect population dynamics.

This project focuses on the analytical and numerical study of ordinary differential equations (ODEs) that model population dynamics. The following methods and materials are utilized:

1.Mathematical Methods:

Calculus: Fundamental techniques from calculus, such as differentiation and integration, are used to derive and solve the ODEs that describe population growth and interactions.

Linear Algebra: Concepts from linear algebra are applied to analyze the stability of equilibrium points, particularly when dealing with systems of ODEs.

Dynamical Systems Theory: This framework is employed to understand the long-term behavior of population models, including the analysis of equilibria and the exploration of phase planes.

2.Software Tools:

MATLAB: MATLAB is used for numerical simulations, allowing for the precise computation and visualization of population dynamics under various scenarios. It is particularly useful for solving complex ODEs and conducting stability analysis.

Python: Python, with its extensive libraries such as NumPy, SciPy, and Matplotlib, is used to perform numerical simulations and create visual representations of model behavior, such as phase portraits and bifurcation diagrams.

3.Analytical Techniques:

Stability Analysis: The stability of equilibria is examined by determining the eigenvalues of the Jacobian matrix at equilibrium points. This helps in understanding whether a population will return to equilibrium after a small perturbation.

Phase Plane Analysis: Phase plane diagrams are used to visualize the trajectories of population systems, helping to identify stable and unstable equilibrium points, limit cycles, and other dynamic behaviors.

Bifurcation Theory: Bifurcation analysis is conducted to explore how changes in key parameters can lead to qualitative changes in the system's behavior, such as the transition from stability to oscillatory dynamics or chaotic behavior.

These materials and methods provide a robust framework for understanding and simulating the complex dynamics of populations, enabling a deeper insight into the factors that influence population stability, growth, and interactions.

Budget Estimation

Category	**1 Year**	**2 Year**	**3 Year**	**Total INR**
Software and Tools	50000	43000		93000
Data Collection	65000	70000		135000
Training and Workshops	60000	50000		110000

Printing Documentation	15000	20000		35000
Contingency (unforeseen expenses)	10000	15000		25000
Total (INR)	**200000**	**198000**		**398000**

Result and Discussion

The results of the study demonstrate the diverse behaviors that can arise from different mathematical models of population dynamics. The exponential growth model predicts unlimited population growth in the absence of constraints, while the logistic model introduces a carrying capacity that limits growth. The Lotka-Volterra model reveals the cyclical nature of predator-prey interactions and shows how the stability of these cycles depends on model parameters. Numerical simulations illustrate how variations in initial conditions and parameters can lead to dramatically different outcomes, including extinction, stable coexistence, or oscillatory dynamics.

The study reveals the diverse and complex behaviors that emerge from different mathematical models of population dynamics:

1.Exponential Growth Model: This model illustrates how, in the absence of limiting factors, a population can grow exponentially without bound. The model serves as a baseline, showing the potential for rapid population expansion when resources are unlimited. However, it also highlights the unrealistic nature of indefinite growth in real-world scenarios.

2.Logistic Growth Model: By introducing the concept of carrying capacity, the logistic growth model provides a more realistic depiction of population growth. Initially, the population grows exponentially, but as it approaches the carrying capacity, the growth rate slows and eventually stabilizes. This model emphasizes the role of environmental constraints in limiting population size and preventing unchecked growth.

3.Lotka-Volterra Predator-Prey Model: The Lotka-Volterra model captures the cyclical interactions between predator and prey populations. The model demonstrates how predator populations depend on prey availability, leading to oscillations in population sizes. The stability of these cycles is highly sensitive to the model parameters, such as birth and death rates, showing that small changes in these factors can result in vastly different dynamics, including stable coexistence, population collapse, or sustained oscillations.

4.Numerical Simulations: Through numerical simulations, the study explores how variations in initial conditions and parameters influence population dynamics. These simulations reveal that small changes in starting populations or growth rates can lead to dramatically different outcomes:

Extinction: In certain scenarios, populations may decline to extinction, particularly if the carrying capacity is too low or if predation pressure is too high.

Stable Coexistence: Under specific conditions, predator and prey populations can coexist in a stable equilibrium, maintaining consistent population sizes over time.

Oscillatory Dynamics: Some parameter settings result in persistent cycles of population booms and busts, reflecting the natural ebb and flow observed in many ecosystems.

These results underscore the importance of model assumptions and parameters in determining population outcomes. They also illustrate the value of mathematical modeling in predicting and understanding the dynamic behavior of ecological systems, providing critical insights for conservation and resource management.

Summary and Conclusion

This project provides an in-depth exploration of mathematical models used to describe population dynamics. Through analytical and numerical methods, we have examined the behavior of key models and discussed their implications for understanding real-world ecological systems. The study highlights the importance of model assumptions and parameter values in determining population outcomes. Future work could extend this analysis to more complex models that incorporate additional biological factors, such as age structure, spatial effects, and stochasticity.

This project offers a comprehensive exploration of mathematical models that describe population dynamics, focusing on the exponential growth model, logistic growth model, and Lotka-Volterra predator-prey model. Through a combination of analytical and numerical methods, we have examined the behavior of these models and discussed their implications for understanding real-world ecological systems.

The study highlights how different models capture various aspects of population dynamics, from unlimited growth in the absence of constraints to the stabilization of populations due to environmental limits and the cyclical interactions between predators and prey. The importance of model assumptions and parameter values in shaping population outcomes is emphasized, showing how small changes can lead to significantly different scenarios, such as extinction, stable coexistence, or oscillatory behavior.

In conclusion, mathematical modeling is a powerful tool for predicting and analyzing population dynamics, providing valuable insights for ecology and conservation. Future research could extend this analysis by incorporating additional biological factors like age structure, spatial distribution, and stochastic effects, leading to more comprehensive models that better reflect the complexity of real-world ecosystems.

Bibliography

1. Murray, J. D. (2002). *Mathematical Biology: I. An Introduction* (3rd ed.). Springer.
2. Brauer, F., & Castillo-Chavez, C. (2012). *Mathematical Models in Population Biology and Epidemiology* (2nd ed.). Springer.
3. Edelstein-Keshet, L. (2005). *Mathematical Models in Biology*. SIAM.
4. Lotka, A. J. (1925). *Elements of Physical Biology*. Williams & Wilkins.
5. Volterra, V. (1926). *Fluctuations in the Abundance of a Species Considered Mathematically*. Nature.
6. Murray, J. D. (2002). Mathematical Biology: I. An Introduction (3rd ed.). Springer.
7. Brauer, F., & Castillo-Chavez, C. (2012). Mathematical Models in Population Biology and Epidemiology (2nd ed.). Springer.
8. Edelstein-Keshet, L. (2005). Mathematical Models in Biology. SIAM.
9. Lotka, A. J. (1925**).** Elements of Physical Biology. Williams & Wilkins.
10. Volterra, V. (1926). Fluctuations in the Abundance of a Species Considered Mathematically. Nature.
11. May, R. M. (1976). Simple Mathematical Models with Very Complicated Dynamics. Nature, 261(5560), 459-467.
12. Turchin, P. (2003). Complex Population Dynamics: A Theoretical/Empirical Synthesis. Princeton University Press.
13. Kot, M. (2001). Elements of Mathematical Ecology. Cambridge University Press.

SWARRNIM
STARTUP & INNOVATION
UNIVERSITY
WHERE IDEAS COME ALIVE
INDIA'S FIRST UNIVERSITY FOR STARTUP

Ref. No: swarrnim/Ro/Utilization/2021/41

Date: 11/11/2021

Statement of Expenditure/Utilization certificate

This is to certify that research project money sanctioned to **Prem Prajapati, Swarrnim Science College, Gandhinagar, Gujarat - 382422** in the academic year 2020-21 has been utilized as per the following details:

Title of Project	Amount Sanctioned in (Rs)	Amount disbursed in (Rs)		Actual Expenditure in (Rs)
		2020-2021	2021-2022	
Mathematical Modeling in Population Dynamics	600000	200000	198000	398000

SWARRNIM STARTUP & INNOVATION UNIVERSITY ACCOUNT SECTION

Accounts/Finance officer

Swarrnim Startup and Innovation University

Date: 19/11/2018

To,

Swarrnim Institute of Technology,
Bhoyan Rathod, Opposite IFFCO,
Near ONGC WSS, Adalaj Kalol Highway,
Gandhinagar, Gujarat - 382422.

Subject: Sanction Letter of Research Project

Dear Researcher,

I am pleased to inform you that the scrutiny committee has approved your research. The details of the Research Proposal and Sanctioned grant is as under.

Title of Research Proposal	Eco-Conscious Consumers: Examining the role of Environmental Concern and Behavior in Sustainable Product Adoption
Name of Principal investigator	Prof. Lakhi Niraj Gareja
Name of Co-investigators	Prof. Kalpana Sani,Dr. Gunjan Yadav, Mr. Chhabildas Gajare, Mr. Dnyaneshwar Kudande, Dr. Chaitanya Singh
Duration in months	12
Sanctioned Grant for Research Work	700000

It is further hereby informed that you will abide to follow all the guidelines/norms, terms, and conditions mentioned in the Research Scheme of company. The principal investigator may contact for any further assistance. All the best for great research work ahead.

With Regards

Registrar
Swarrnim Startup & Innovation University
At : Boyan Rathod, Gandhinagar.

Swarrnim Startup & Innovation University Bhoyan Rathod, Gandhinagar

Ragin Ravindrabhai Shah

Digitally signed by Ragin Ravindrabhai Shah
DN: c=IN, o=Personal, title=4505, pseudonym=02ae98bb114542e56b44d53aec4ff1ce, 2.5.4.20=f2d4874d45a02b7bd89e3bae6fe83c5e9f5408942bb4f9937c56aeb4067901483, postalCode=380015, st=Gujarat, serialNumber=92660a2fa77309ae82dc5ae6e10f5cf7763c41741552ca365cbb7407b66b44d6, cn=Ragin Ravindrabhai Shah
Date: 2024.10.18 10:45:46 +05'30'

“Eco-Conscious Consumers: Examining the role of Environmental Concern and Behavior in Sustainable Product Adoption”

Research Project Report Submitted to

Spechrom Solutions

Submitted by:

Principal Investigator: Prof. Lakhi Niraj Gareja, Swarrnim Institute of Technology,

Co investigator: Prof. Kalpana Sani, Dr. Gunjan Yadav, Mr. Chhabildas Gajare, Mr. Dnyaneshwar Kudande, Dr. Chaitanya Singh

INDEX

Chapter no	Content
1	Theoretical framework & review of literature
2	Research methodology
3	Data analysis
4	Discussion
5	Implication
6	Reference
7	Annexure

1. THEORITICAL FRAMEWORK

1.1 EUDAIMONIC WELL-BEING

Eudaimonic well-being in the context of electric vehicles in India refers to the potential benefits that go beyond more convenience or cost saving associated with using electric vehicles. It encompasses the idea that using Electric Vehicles can contribute to a more meaningful and purposeful life for individuals. As well as greater social and environmental well-being.

Environmental Impact:

Choosing to drive an electric vehicle can be seen as a way to align one's actions with a sense of purpose and responsibility towards the environment. By reducing greenhouse gas emissions and air pollution, individuals can feel that they are making a positive contribution to the well-being of the planet.

Reduced Dependence on Fossil Fuels:

Embracing electric vehicles can be viewed as a step towards reducing dependence on fossil fuels, which can be seen as a meaningful and purposeful endeavor to secure a sustainable future.

Supporting Sustainable Practices:

Owning and using an EV can align with values of sustainability and a sense of ethical consumerism. This can lead to a feeling of well-being by knowing that one's choices are contributing to a more sustainable society.

Economic Benefits:

In the Indian context, there might be economic incentives and savings associated with EVs, which can enhance the sense of well-being. These include reduced fuel costs, government incentives, and lower maintenance expenses.

Community and Social Benefits:

Encouraging the use of EVs can also foster a sense of community and social connection, as it may involve sharing knowledge, experiences, and collective actions to promote clean transportation Subjective well-being is often used to describe people’s overall satisfaction with their lives. It includes how people feel and think

about their quality of life using emotional evaluation and cognitive judgments, by far most existing studies tend to employees subjectively perceived self-report data as a measurement of well-being. Influences of rural built environment on travel mode choice of rural residents: the case of rural Sichuan

REVIEW OF LITERATURE

Compared to conventional cyclists, e-bike users have a higher propensity to commit risk-taking behaviours such as occupying motor vehicle lanes, speeding, running a red light, cycling on the wrong side of the road (Bai et al., 2015). Considering these safety concerns, several Chinese cities have restricted the use of e-bikes in urban areas. Some cities, such as Beijing, Shenzhen, Xiamen and Zhuhai, have prohibited the use of e-bikes in central urban areas and on major arterial roads.

Cherry and Cervero (2007) developed a binary logit model to investigate the factors that influenced the transition from a conventional bicycle to an e-bike. They found that travel time savings, reduced cycling effort, e-bike ownership, a positive attitude for e-bikes, age, and gender have influenced the decision-making. Cherry et al. (2016) established choice models to explore the pattern of e-bike usage over time. Higher income and car ownership strongly influenced the transition from an e-bike to a car. Additionally, younger and female e-bike users had high propensity to switch from riding to driving. Cheng et al. (2019) reported that long distances to the nearest metro and bus station, school and shopping trips, older people, driving license holders and e-bike owners were more likely to choose an e-bike. Furthermore, land use pattern, road network density, bus network density, the number of bus stops and car ownership all played an important role in the users' choice-making. Meanwhile, the use of shared e-bikes could be affected by weather, day of week, time of year, population density, proximity to public transit center and recreational centers, and bike trail availability (He et al., 2019).

Environmental Awareness

Studies have point out that environmental awareness and travelers' knowledge of carbon emissions have the potential to moderate travel choices (Cao and Yang, 2017 and Jia et al., 2018). Low-carbon knowledge and travel habits are closely correlated

with the use of low-emission transport modes. Therefore, the environmental awareness of e-bike users may influence their mode choice behaviours.

1.2 ENVIRONMENTLE BEHAVIOUR

Environmental behaviors in the context of electric vehicles refers to the action and choices individuals, business, and government make to minimize then Environmental impact of using producing and promoting Electric Vehicle.

Adoption of EVs:

Choosing to drive or purchase an electric vehicle as a personal or corporate transportation option is a fundamental environmental behavior. This choice reduces the emissions associated with traditional internal combustion engine vehicles.

Charging Practices:

Using clean energy sources, such as solar or wind power, for charging EVs is an environmentally responsible behavior. It minimizes the carbon footprint associated with the electricity used for charging.

Efficient Driving Habits:

Practicing energy-efficient driving habits, such as regenerative braking and smooth acceleration, helps maximize the range of EVs and reduces energy consumption.

Supporting Renewable Energy:

Encouraging and investing in renewable energy sources for electricity generation supports an environmentally friendly energy supply for EVs.

Battery Recycling and Disposal:

Proper disposal and recycling of EV batteries are essential environmental behaviors. Recycling lithium-ion batteries reduces the environmental impact of resource extraction and waste**.**

Low-Carbon Travel Mode Choices

Apart from a few shock events (e.g., the 1979 oil shock, the Gulf War, 9/11 or the global financial crisis in 2008/9), there has been a continuous growth in global air traffic passenger numbers since the 1950ies (Oxley and Jain, 2015). Political discussions in several countries (e.g., Switzerland and Germany) on the introduction of CO2 taxes on flight tickets aim at increasing flight relatively to train ticket prices. As for changing social norms, two diverging tendencies are observable. Frequent flyer and hypermobile lifestyles (Cohen and Gössling, 2015, Cohen et al., 2018) accelerate air travel growth. Contrarily, the “flying shame” movement (e.g.,

#flygskam) has led to decreasing flight passenger numbers in Sweden since 2017 (Hoikkala and Magnussen, 2019). In addition, a study by the Worldwide Fund for Nature shows that, in 2018, 18% of Swedes chose train over air travel (Hoikkala and Magnussen, 2019). Substituting flights with train travel can significantly reduce transport-related CO2 emissions as a train trip can save around 80–90% of CO2 emissions compared to the same trip with a flight.1 In addition to the Swedish example, several academic studies (e.g., Hares et al., 2010, Cohen et al., 2011) highlight the importance of investigating to what extent changing behavior towards low-carbon substitutes is a possible solution to limit CO2 emissions from air travel.

Many governments seeking to reduce carbon emissions and oil dependency, and given urban air quality concerns, have invested significantly to support the transition to a greener, more sustainable automobility. In doing so, they have implemented a range of policy instruments to stimulate the design, manufacture and take-up of hybrids, fuel cell and especially battery electric vehicles (BEVs). Manufacturers have responded by exploiting new technologies to produce alternatively fueled vehicles (AFVs) that facilitate travel in smarter and more sustainable ways. However, to date the take-up of AFVs has been slower than anticipated, attaining only modest market share, nowhere near the level required to push such vehicles into the mainstream.

1.3 ENVIRONMETAL CONCERN

Electric vehicles (EVs) have gained popularity as a more environmentally friendly alternative to traditional internal combustion engine vehicles. However, there are still several environmental concerns associated with EVs:

Electricity Source:

The environmental benefits of EVs largely depend on the source of the electricity used to charge them. If the electricity comes from fossil fuels, such as coal or natural gas, the overall emissions reduction may be limited.

Battery Production:

The manufacturing of lithium-ion batteries, which are commonly used in EVs, can be energy-intensive and involve the extraction of raw materials like lithium and cobalt. These processes can have negative environmental impacts.

Battery Recycling:

The recycling and disposal of EV batteries need careful management to minimize environmental impacts, as these batteries can contain hazardous materials.

Charging Infrastructure:

The expansion of charging infrastructure can have localized environmental impacts, such as land use changes and potential strain on the electricity grid.

Vehicle Weight:

EVs tend to be heavier due to the weight of their batteries. This can result in increased tire and brake wear, contributing to microplastic pollution and increased particulate matter emissions.

The awareness regarding the detrimental effects of human actions on the environments grown over the years, with air and water pollution typically at the top pushing consumers to make adjustments in their shopping habits. Individuals who are concerned with the environment tend to reduce the consumption of goods that are perceived to have a significant ecological impact. Also, consumers are more likely to adopt environmentally friendly behaviors as their environmental concerns grow stronger, which typically also includes the adoption of electric vehicles. Many studies have demonstrated the correlation between environmental concern and the adoption of eco-friendly vehicles, thereby considering environmental concern as the primary factor for deciding to use BEVs. Indeed, the electrification of transportation has long been regarded as a promising technology leading to pollutants reduction and preserve the environment. For a small territory like Macau, the issue of electric mobility is particularly relevant because ground-level ozone (O3) is a major pollutant in the region. Indeed, the IQ Air report (2020) ranks Macau as one of the most polluted countries in Southeast Asia. It is not surprising that residents recognize the benefits of reducing pollution, which would not only make them healthier but also enhance Macau's appeal as a tourist destination. Despite the Chinese government’s efforts for sustainable transportation, the penetration of electric vehicles in Macau is relatively low. For instance, the number of BEVs registered in 2020 totaled 980 units, compared to more than 111,000 vehicles registrations in that same year. The high purchase price and the limited driving range are typically identified as barriersto BEVs adoption. If

we look at vehicle price as one of the key factors, we may find that Macau has great market potential as it is ranked among the wealthiest places in the world. In fact, government statistics shows that residents enjoy an average monthly salary of USD 2,125 (but considerably higher in the Casino sector) and have bank deposits of about USD 125,000 per capita. Also, vehicle taxation in Macau is lower than in other regions, which influences the demand for luxury over non-luxury vehicles (U, 2019). Additionally, the relatively small size of the territory (32,9 Km2) (DESEC, 2022) seems to be an excellent fit in terms of the driving range of the most common battery electric vehicles. In a territory where the population is generally concerned about the environment, and the typical resistance factors for BEVs adoption do not seem to hold true, there is the need to consider other elements that could affect the intention to adopt battery-electric technology.

2. RESEARCH METHODOLOGY

2.1 Measurement instrument

The questionnaire for the study consisted of three sections with five measuring different constructs and the last, demographics. The scales used in the present study were - environmental concern and environmental behaviour. All the items in the scales were Likert type indicating Strongly Disagree till Strongly Agree.

2.2 Environmental concern scale

The scale used in the analysis was a measure of environmental concern indicating that the respondent was concerned about the environment and believed that individual, social, and political changes were necessary to reduce damage to the environment. The six items reflected concern, environmental abuse, importance of limiting consumption, political and social change, and stricter enforcement of environmental laws.

2.3 Environmental behaviours scale

The present study used two relevant types of ERBs, direct and indirect. The behavior measurement model includes both of these types. Four items measured direct actions perceived to have immediate, positive effects on the environment if many people elicit them. The items relate to purchasing environmentally friendly products, organic products, products that reduce household waste, and products that contain recycled

material. Four items measured the indirect effects of joining environmental organizations, contributing money to environmental organizations, subscribing to environmental magazines, and contacting a legislative policy maker.

2.4 Non-Probability Convenience Sampling

The research has used the convenience sampling method, where we selected the individuals who are most easily accessible or convenient to study. This type of sampling is often used in pilot studies or exploratory research. The data was collected from my collage students.

OBJECTIVE

Does environmental concern has correlation with environmental behaviour.

Does environmental behaviour has correlation with output of purchasing environmental friendly products.

Does output of purchasing environmental friendly products has correlation with environmental concern.

RESERCH HYPOTHIESES

H_{01}- Environmental concern and environmental behaviour significantly correlated with each other.

H_{02}- Environment behaviour and output of purchasing environmental friendly products significantly correlated with each other.

H_{03}- Environmental behaviour Direct and environmental behaviour indirect and environmental concern significantly correlated with each other.

H_{04}- Environmental behaviour Direct and environmental behaviour indirect and output of purchasing environmental friendly products significantly correlated with each other.

H_{05}- output of purchasing environmental friendly products significantly affected by environmental behaviour and environmental concern.

H_{06}- output of purchasing environmental friendly products significantly affected by the environmental behaviour Direct and environmental behaviour indirect.

BUDGET ESTIMATE:

Category	Year 1	Year 2	Total (INR)
Survey Tools/Questionnaires (printing, software):	15000	10000	25000
Materials for Workshops/Focus Groups:	12000	10000	22000
Stationery & Miscellaneous:	7000	5000	12000
Survey Distribution & Travel:	75000	30000	105000
Incentives for Participants (gift vouchers, coupons):	40000	30000	70000
Focus Groups (venue rental, refreshments):	20000	10000	30000
Software Licenses (SPSS, NVivo, etc.):	60000	35000	95000
Data Coding & Entry Costs:	40000	25000	65000
Consultant/Expert Fees for Statistical Analysis:	40000	20000	60000
Publication & Dissemination	70000	30600	100600
Travel & Conference Participation	21000	-------	21000
Total (INR)	400000	205600	605600

Category	Year 1	Year 2	Total (INR)

Total (INR)	**3,57,000**	**1,80,000**	**5,37,000**

4. DATA ANALYSIS AND CONCLUSION

H01- Environmental concern and environmental behaviour significantly correlated with each other.

Correlations			
		EC_MEAN	EB_MEAN
EC_MEAN	Pearson Correlation	1	.708**
	Sig. (2-tailed)		.000
	N	249	249
EB_MEAN	Pearson Correlation	.708**	1
	Sig. (2-tailed)	.000	
	N	249	249
**. Correlation is significant at the 0.01 level (2-tailed).			

INTERPRETATION

The correlation coefficient between EC_MEAN and EB_MEAN is 0.708, indicating strong positive correlation between these two variables. The significance level (p-value) for this correlation coefficient is <0.001, meaning that the correlation is statistically significant at the 0.01 level (2-tailed), suggesting that the observed correlation is unlikely to have occurred by random chance The sample size for both variables is 249 data points, indicating the number of observations used to calculate the correlation coefficient.

H_{02}- Environment behaviour and output of purchasing environmental friendly products significantly correlated with each other.

Correlations			
		EB_MEAN	EFP_MEAN
EB_MEAN	Pearson Correlation	1	.756**
	Sig. (2-tailed)		.000
	N	249	249

EFP_MEAN	Pearson Correlation	.756**	1
	Sig. (2-tailed)	.000	
	N	249	249

INTERPRETATION

The correlation coefficient between EB_MEAN and EFP_MEAN is 0.756, indicating a strong positive correlation between these two variables. The significance level (p-value) for this correlation coefficient is <0.001, suggesting that the correlation is statistically significant at the 0.01 level (2-tailed), meaning it is unlikely to have occurred by random chance The sample size for both variables is 249 data points, representing the number of observations used to compute the correlation coefficients.

H_{03}- Environmental behaviour Direct and environmental behaviour indirect and environmental concern significantly correlated with each other.

Correlations				
		EBD_MEAN	EBI_MEAN	EC_MEAN
EBD_MEAN	Pearson Correlation	1	.856**	.756**
	Sig. (2-tailed)		.000	.000
	N	249	249	249
EBI_MEAN	Pearson Correlation	.856**	1	.606**
	Sig. (2-tailed)	.000		.000
	N	249	249	249
EC_MEAN	Pearson Correlation	.756**	.606**	1
	Sig. (2-tailed)	.000	.000	
	N	249	249	249
**. Correlation is significant at the 0.01 level (2-tailed).				

INTERPRETATION

The correlation coefficient with itself is 1, as expected, representing the perfect correlation between a variable and itself The correlation coefficients between different variables indicate the strength and direction of the relationship between them. The significance levels (p-values) for each correlation coefficient are <0.001, indicating that all correlations are statistically significant at the 0.01 level (2-tailed),

suggesting that the observed correlations are unlikely to have occurred by random chance The sample size for all variables is 249 data points, reflecting the number of observations used to calculate the correlation coefficients.

H_{04}- Environmental behaviour Direct and environmental behaviour indirect and output of purchasing environmental friendly products significantly correlated with each other.

Correlations				
		EBD_MEAN	EBI_MEAN	EFP_MEAN
EBD_MEAN	Pearson Correlation	1	.856**	.795**
	Sig. (2-tailed)		.000	.000
	N	249	249	249
EBI_MEAN	Pearson Correlation	.856**	1	.659**
	Sig. (2-tailed)	.000		.000
	N	249	249	249
EFP_MEAN	Pearson Correlation	.795**	.659**	1
	Sig. (2-tailed)	.000	.000	
	N	249	249	249
**. Correlation is significant at the 0.01 level (2-tailed).				

INTERPRETATION

The correlation coefficient with itself is 1, representing a perfect correlation between a variable and itself. The correlation coefficients between different variables indicate the strength and direction of the relationship between them The significance levels (p-values) for each correlation coefficient are <0.001, indicating that all correlations are statistically significant at the 0.01 level (2-tailed), suggesting that the observed correlations are unlikely to have occurred by rando m chance. he sample size for all variables is 249 data points, indicating the number of observations used to calculate the correlation coefficients.

REGRESSION

H_{05}- output of purchasing environmental friendly products significantly affected by environmental behaviour and environmental concern.

Model Summary

Model Summary[b]				
Model	R	R Square	Adjusted R Square	Std. Error of the Estimate
1	.861[a]	.741	.739	.62432
a. Predictors: (Constant), EB_MEAN, EC_MEAN				
b. Dependent Variable: EFP_MEAN				

ANOVA[a]						
Model		Sum of Squares	Df	Mean Square	F	Sig.
1	Regression	274.083	2	137.041	351.589	.000[b]
	Residual	95.885	246	.390		
	Total	369.968	248			
a. Dependent Variable: EFP_MEAN						
b. Predictors: (Constant), EB_MEAN, EC_MEAN						

INTERPRETACION

Model: This section shows the variation explained by the regression model. Sum of Squares: This is the sum of the squared differences between the predicted values and the mean of the dependent variable. df (Degrees of Freedom): This represents the number of independent parameters in the model. In this case, there are 2 degrees of freedom for the regression. Mean Square: This is the average variability within the model, calculated by dividing the sum of squares by the degrees of freedom. F-value: This is the ratio of the explained variance to the unexplained variance. It measures

Coefficients[a]

Model		Unstandardized Coefficients		Standardized Coefficients	t	Sig.
		B	Std. Error	Beta		
1	(Constant)	.330	.127		2.604	.010
	EC_MEAN	.562	.044	.584	12.700	.000
	EB_MEAN	.358	.048	.342	7.453	.000

a. Dependent Variable: EFP_MEAN

whether the model's explanatory variables have a statistically significant effect on the dependent variable. Sig. (Significance): This is the p-value associated with the F-value. It indicates the probability of obtaining an F-value as extreme as the one observed, assuming the null hypothesis (no relationship between independent and dependent variables) is true. Residual: This section shows the unexplained variation after accounting for the regression model. Sum of Squares: This is the sum of the squared differences between the observed values and the predicted values from the regression model. This table helps assess the overall fit of the regression model and determine whether the independent variables collectively have a significant impact on the dependent variable. In your case, the F-value is very large and the associated p-value is very small (<0.001), indicating that the regression model is statistically significant and explains a significant amount of the variance in the dependent variable.

ANOVA

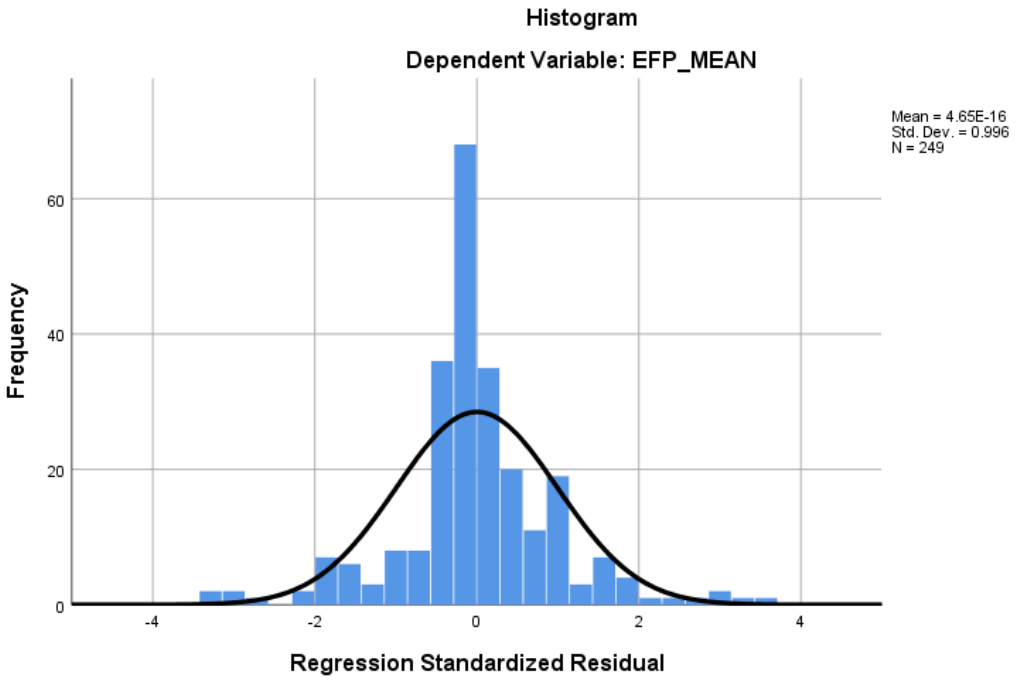

The x-axis likely represents the independent variable(s), and the y-axis represents the dependent variable (EFP_MEAN).Each point on the line represents a specific value of the independent variable(s) and the corresponding value of the dependent variable.The shape of the line and how it trends over the range of the independent variable(s) can indicate the nature and strength of the relationship between the independent variable(s) and the dependent variable.

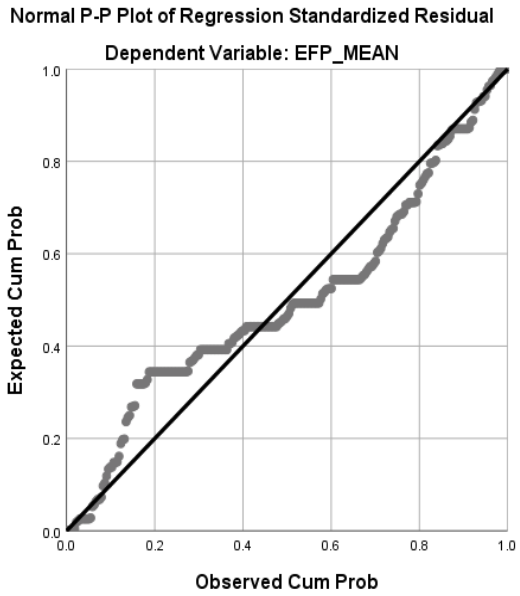

Model		Sum of Squares	Df	Mean Square	F	Sig.
1	Regression	277.560	3	92.520	245.298	.000[b]
	Residual	92.408	245	.377		
	Total	369.968	248			
a. Dependent Variable: EFP_MEAN						
b. Predictors: (Constant), EBI_MEAN, EC_MEAN, EBD_MEAN						

The x-axis likely represents the independent variable(s), and the y-axis represents the dependent variable (EFP_MEAN).Each point on the line represents a specific value of the independent variable(s) and the corresponding value of the dependent variable.The shape of the line and how it trends over the range of the independent variable(s) can indicate the nature and strength of the relationship between the independent variable(s) and the dependent variable.

H_{06}- output of purchasing environmental friendly products significantly affected by the environmental behaviour Direct and environmental behaviour indirect

MODEL SUMMARY

Model Summary				
Model	R	R Square	Adjusted R Square	Std. Error of the Estimate
1	.866[a]	.750	.747	.61415
a. Predictors: (Constant), EBI_MEAN, EC_MEAN, EBD_MEAN				
b. Dependent Variable: EFP_MEAN				

ANOVA

Coefficients						
Model		Unstandardized Coefficients		Standardized Coefficients	t	Sig.
		B	Std. Error	Beta		
1	(Constant)	.360	.125		2.875	.004
	EC_MEAN	.506	.047	.525	10.674	.000
	EBD_MEAN	.396	.075	.398	5.262	.000
	EBI_MEAN	4.164E-6	.063	.000	.000	1.000
a. Dependent Variable: EFP_MEAN						

INTERPRETACION

Sum of Squares: This is the sum of the squared differences between the predicted values and the mean of the dependent variable. df (Degrees of Freedom): This represents the number of independent parameters in the model. In this case, there are 3 degrees of freedom for the regression. Mean Square: This is the average variability within the model, calculated by dividing the sum of squares by the degrees of freedom. F-value: This is the ratio of the explained variance to the unexplained variance. It measures whether the model's explanatory variables have a statistically significant effect on the dependent variable. Sig. (Significance): This is the p-value associated with the F-value. It indicates the probability of obtaining an F-value as extreme as the one observed, assuming the null hypothesis (no relationship between independent and dependent variables) is true. Residual: This section shows the unexplained variation after accounting for the regression model. The table indicates that the regression model as a whole is statistically significant, as indicated by the F-value being very large and the associated p-value being very small (<0.001). This suggests that the independent variables (EBI_MEAN, EC_MEAN, and EBD_MEAN) collectively have a significant impact on the dependent variable (EFP_MEAN).

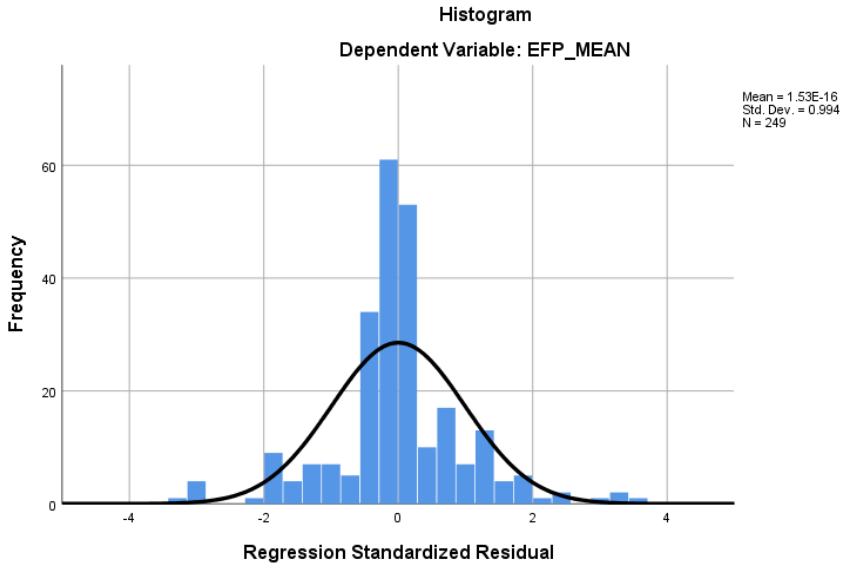

The x-axis likely represents the independent variable(s), and the y-axis represents the dependent variable (EFP_MEAN).Each point on the line represents a specific value of the independent variable(s) and the corresponding value of the dependent variable.The shape of the line and how it trends over the range of the independent variable(s) can indicate the nature and strength of the relationship between the independent variable(s) and the dependent variable.

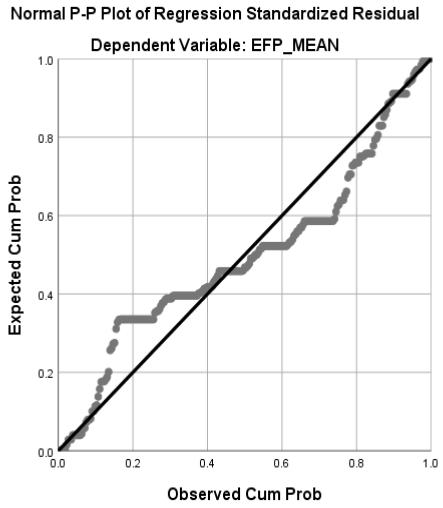

The x-axis likely represents the independent variable(s), and the y-axis represents the dependent variable (EFP_MEAN).Each point on the line represents a specific value of the independent variable(s) and the corresponding value of the dependent variable.The shape of the line and how it trends over the range of the independent variable(s) can indicate the nature and strength of the relationship between the independent variable(s) and the dependent variable.

CONCLUSION

This research aims to understand the impact of various factors on ECO-conscious consumers in India. The study employs a qualitative and quantitative research design both, with data collected from 250 respondents across India. The respondents varied in age, gender, education level. The study's primary focus is to measure the what are the thoughts of the respondents for the environment and buying the environment friendly products and how they are contributing for the environment. including age, gender, education. The research hypotheses suggest that there is no difference in the age, income, gender, occupation, area and education have no impact on how they are behaving towards the environment.

The data was analysed using ANOVA (Analysis of Variance). ANOVA was used to determine whether there were any statistically significant differences between the means of three or more independent groups. In this case, ANOVA was used to test the impact of age, gender, education level, occupation, The significance value of less than 0.05 indicates the variable under consideration follows normal distribution. Correlation is a statistical measure that expresses the extent to which two variables are linearly related (meaning they change together at a constant rate). It's a common tool for describing simple relationships without making a statement about cause and effect. The significance levels (p-values) for each correlation coefficient are <0.001, indicating that all correlations are statistically significant at the 0.01 level (2-tailed), suggesting that the observed correlations are unlikely to have occurred by random chance The sample size for all variables is 250 data points, reflecting the number of observations used to calculate the correlation coefficients The literature review reveals that environmental concerns, environment behaviour and output of purchasing environmental friendly products plays a crucial role in various aspects of decision-making.

Environmental behavior encompasses a diverse range of actions individuals take to positively impact the natural world. This includes practices like recycling, where materials such as paper, plastic, glass, and metal are sorted and disposed of in designated bins to reduce landfill waste and conserve resources. Energy conservation is another crucial aspect, involving measures like turning off lights, using energy-efficient appliances, and insulating homes to minimize heating and cooling needs, thereby reducing carbon emissions.

Water conservation efforts focus on fixing leaks, using water-efficient appliances, and adopting habits like taking shorter showers. Sustainable transportation choices, such as walking, biking, carpooling, or using public transit, help decrease greenhouse gas emissions from vehicles. Additionally, sustainable consumption involves making informed decisions about purchasing products with minimal packaging, opting for durable and repairable items, and supporting brands committed to eco-friendly practices. Active participation in conservation initiatives like tree planting, wildlife habitat restoration, and beach cleanups, as well as advocacy efforts to raise awareness and promote policy changes, also play vital roles in fostering a more environmentally conscious society. Embracing eco-friendly lifestyle choices such as composting organic waste, reducing single-use plastic, choosing renewable energy sources, and supporting local and organic food production further contribute to the collective effort towards environmental sustainability. The predicted values and residuals provide insights into how well the model fits the data. The small residuals and standardized residuals suggest that the model explains most of the variance in the dependent variable.

Overall, the regression analysis suggests that EC_MEAN and EBD_MEAN are significant predictors of EFP_MEAN, while EBI_MEAN may not be as relevant in this context. However, further analysis and validation may be needed to confirm these findings and assess the robustness of the model.

IMPLICTION

Marketing Strategy: Understanding the role of environmental concern and behavior highlights the importance of tailored marketing strategies. Companies need to emphasize the eco-friendly aspects of their products to appeal to environmentally conscious consumers. This could involve highlighting features such as recyclability, use of sustainable materials, energy efficiency, or carbon footprint reduction. Marketing messages should resonate with consumers' values and priorities, showcasing how purchasing sustainable products aligns with their environmental beliefs and behaviors. Utilizing eco-friendly branding, imagery, and messaging can help attract and retain eco-conscious consumers. Long-term Brand Value, Building a reputation as a sustainable and socially responsible brand can enhance long-term

brand value and customer loyalty. Companies that prioritize sustainability demonstrate their commitment to addressing global environmental challenges, fostering trust and loyalty among consumers. Market Opportunities, Embracing sustainability opens up new market opportunities and revenue streams As consumer preferences shift towards eco-friendly products and services, companies that lead the way in sustainability can capitalize on emerging market trends and gain a competitive edge.

Product Development: Insights from the study suggest a growing demand for sustainable products. This necessitates investment in research and development to create eco-friendly alternatives that meet consumer expectations. Companies may need to explore new materials, technologies, and manufacturing processes to reduce environmental impact Product redesign may be required to incorporate sustainable features, such as using recycled materials, minimizing packaging waste, or designing products for durability and longevity. Companies should prioritize innovation and sustainability in their product development pipeline to stay competitive in the market. Innovation and Differentiation, Emphasizing sustainability can drive innovation and differentiation in the marketplace. Companies that invest in eco-friendly technologies, design, and practices can differentiate their products from competitors, attract environmentally conscious consumers, and capture market share.

Consumer Engagement: Engaging with environmentally conscious consumers requires transparent communication about a company's environmental practices and product sustainability. Companies need to be authentic and credible in their messaging, demonstrating a genuine commitment to sustainability Providing easily accessible information about the environmental attributes of products, such as eco-labels or certifications, can help consumers make informed purchasing decisions. Companies should leverage various communication channels, including websites, social media, and packaging, to educate consumers about their sustainability in itiatives.

Supply Chain Optimization: Meeting the demand for sustainable products may require companies to reevaluate their supply chains. This could involve sourcing eco-friendly materials, reducing transportation emissions, and ensuring ethical labor practices throughout the supply chain. Collaborating with suppliers to improve

sustainability practices and traceability can enhance transparency and accountability. Companies should prioritize suppliers that share their commitment to sustainability and implement robust supplier management systems to monitor compliance.

Regulatory Compliance: Companies must stay abreast of environmental regulations and standards to ensure compliance with legal requirements. This may involve investing in monitoring equipment, pollution control technologies, and training programs to mitigate environmental impact.Proactively addressing regulatory requirements demonstrates corporate responsibility and reduces the risk of non-compliance penalties or reputational damage. Companies should regularly review and update their environmental policies and procedures to reflect changes in regulations and industry best practices.

Risk Management: Addressing environmental concerns proactively can mitigate operational and reputational risks. Companies that fail to address environmental issues may face regulatory fines, legal liabilities, supply chain disruptions, and reputational damage from negative publicity or consumer backlash.

Cost Savings and Efficiency: Implementing sustainable practices can lead to cost savings and operational efficiencies. For example, investing in energy-efficient technologies can reduce energy consumption and lower utility costs. Similarly, reducing waste and optimizing resource use can minimize production costs and improve profitability.

Partnerships and Collaboration: Collaborating with stakeholders, such as suppliers, industry partners, NGOs, and government agencies, can amplify the impact of sustainability initiatives. Partnerships can facilitate knowledge sharing, resource pooling, and collective action towards achieving common sustainability goals.

Employee Engagement and Talent Acquisition: Demonstrating a commitment to sustainability can enhance employee engagement, morale, and retention. Employees are increasingly seeking purpose-driven organizations that align with their personal values. Companies that prioritize sustainability can attract and retain top talent who are passionate about making a positive impact.

Consumer Education and Advocacy: Engaging in consumer education and advocacy initiatives can raise awareness about environmental issues and empower consumers to make sustainable choices. Companies can leverage their platforms and resources to educate and inspire consumers to adopt environmentally friendly behavior.

REFRENCES

- A.Richared, A. Vander Horst (2014) Van Der Horst Et Al. Traffic Conflicts On Bicycle Paths: A Systematic Observation Of Behaviour From Video
- Andrew Hares (2010) Et Al., 2010 A. Hares, J. Dickinson, K. Wilkes Climate Change And The Air Travel Decisions Of Uk Tourists
- Ari & Sari (2017) Ari, I., & Sari, R. (2017). Differentiation Of Developed And Developing Countries For The Paris Agreement. Energy Strategy Reviews.
- Becken (2007) S. Becken Tourists' Perception Of International Air Travel's Impact On The Global Climate And Potential Climate Change Policies
- Bamberg (2003) Bamberg, S. (2003). How Does Environmental Concern Influence Specific Environmentally Related Behaviours? A New Answer To An Old Question. Journal Of Environmental Psychology
- Bamberg & Moser (2007) Bamberg, S., & Möser, G. (2007). Twenty Years After Hines, Hungerford, And Tomera: A Newmeta-Analysis Of Psycho-Social Determinants Of Pro-Environmental Behaviour.
- Cherry Et Al (2016) Cherry Et Al. Dynamics Of Electric Bike Ownership And Use In Kunming, China
- Cohen And Gossling (2015) Cohen And Gossling Binge Flying: Behavioural Addiction And Climate Change
- Cohen Et Al(2018) Cohen Et Al. Cohen Et Al., 2018 S.A. Cohen, P. Hanna, S. Gössling The Dark Side Of Business Travel: A Media Comments Analysis
- Cohen (2011) S.A. Cohen, J.E. Higham, C.T. Cavaliere Binge Flying: Behavioural Addiction And Climate Change
- Diyi Lio (2017) Liu Et Al. The Influence Of Social-Psychological Factors On The Intention To Choose Low-Carbon Travel Modes In Tianjin, China

- De Medeiors, Duarte Riberio & Cortimilglia (2014) De Medeiros, J., Duarte Ribeiro, J., & Cortimiglia, M. (2014). Success Factors For Environmentally Sustainable Product Innovation: A Systematic Literature Review
- Dietz, Strem & Guagnano (1998) Dietz, T., Stern, P., & Guagnano, G. (1998). Social Structural And Social Psychology Environmental Concern
- Fransson & Garling (1998) Fransson, N., & Garling, T. (1999). Environmental Concern: Conceptual Definitions, Measurement Methods, And Research Findings.
- Geels (2010) Geels The Dynamics Of Socio-Technical Transitions. A Sociotechnical Perspective. In John Grin, Jan Rotmans, J. W. Schot (Eds.): Transitions To Sustainable Development. New Directions In The Study Of Longterm Transformative Change. New York: Routledge (Routledge Studies In Sustainability Transitions).
- Geels (2011) Cultural Legitimacy And Framing Struggles In Innovation Journeys. A Cultural-Performative Perspective And A Case Study Of Dutch Nuclear Energy (1945–1986). In Technological Forecasting And Social Change.
- Geo (2015) Global Ev Outlook 2015. Mainstream Consumers Driving Plug-In Battery-Electric And Plug-In Hybrid Electric Cars: A Qualitative Analysis Of Responses And Evaluations. Transportation Research Part A: Policy And Practice.
- Gleim, Smith Andrew & Cornin (2013) Gleim, M., Smith, J. Andrews, D., & Cronin, J. (2013). Against The Green: A Multi-Method Examination Of The Barriers To Green Consumption.
- Hong Hu (2014) Hu Et Al. Travel Mode Choices In Small Cities Of China: A Case Study Of Changing
- Hong Hu (2019) H. Hu Et Al. Travel Mode Choices In Small Cities Of China: A Case Study Of Changing Transport. Res. Part D: Transp. Environ
- Hoikkala And Magnussen (2019) Hoikkala And Magnussen, 2019 H., Magnussen, N., 2019. As 'Flying Shame' Grips Sweden, Sas Ups Stakes In Climate Battle. Bloomberg.Com. Retrieved On June 25th 2019
- Hao Et Al (2014) Hao, H., Ou, X., Du, J., Wang, H., And Ouyang, M. (2014) China's Electric Vehicle Subsidy Scheme: Rationale And Impacts. Energy Policy.
- Huttel Ziesemer, Payer & Balderjahn (2018) Hüttel, A., Ziesemer, F., Peyer, M., & Balderjahn, I. (2018). To Purchase Or Not? Why Consumers Make Economically (Non-) Sustainable Consumption Choices. Journal Of Cleaner Production.

- Huttel Et Al (2018) Hynes, N., & Wilson, J. (2016). I Do It, But Don't Tell Anyone! Personal Values, Personal And Social Norms: Can Social Media Play A Role In Changing Pro-Environmental Behaviours?

- Kern Markard (2016) Kern Markard Harnessing Theories Of The Policy Process For Analysing The Politics Of Sustainability Transitions. A Critical Survey. In Environmental Innovation And Societal Transitions.
- Kapoor & Dwivedi (2020) Kapoor, K. K., & Dwivedi, Y. K. (2020). Sustainable Consumption From The Consumer's Perspective: Antecedents Of Solar Innovation Adoption.
- Lu Bai (2013) Bai Et Al, Comparative Analysis Of The Safety Effects Of Electric Bikes At Signalized Intersections
- Lu Bai (2015) Bai Et Al, Comparative Analysis Of Risky Behaviours Of Electric Bicycles At Signalized Intersections
- Long Cheng (2019) Cheng Et Al. Applying A Random Forest Method Approach To Model Travel Mode Choice Behaviour
- Laroche, Bergeron & Barbaro Forleo (2001) Laroche, M., Bergeron, J., & Barbaro-Forleo, G. (2001). Targeting Consumers Who Are Willing To Pay More For Environmentally Friendly Products. Journal Of Consumer Marketing
- Lang & Dewitte (2019) Lange, F., & Dewitte, S. (2019). Measuring Pro-Environmental Behavior: Review And Recommendations
- Ning Jia(2018) Jia Et Al. Influence Of Attitudinal And Low-Carbon Factors On Behavioural Intention Of Commuting Mode Choice – A Cross-City Study In China
- Oxley And Jain (2015) Oxley And Jain, 2015 Oxley., Jain, C., 2015. Chapter 1.4 Global Air Passenger Markets: Riding Out Periods Of Turbulence. In: Crotti, R., Misrahi, T. (Eds.), The Travel & Tourism Competitiveness Report 2015.
- Onsongo (2017) Onsongo, E.; Schot, J. (2017): Inclusive Innovation And Rapid Sociotechnical Transitions. The Case Of Mobile Money In Kenya. Spru. Brighton (Spru Working Paper Swps).
- Pickett-Baker & Ozaki (2018) Pickett-Baker, J., & Ozaki, R. (2008). Pro-Environmental Products: Marketing Influence On Consumer Purchase Decision. Journal Of Consumer Marketing
- Robert Cervo, Christopher Cherry (2007) Cherry And Cervero. Use Characteristics And Mode Choice Behaviour Of Electric Bike Users In China

- Stephen Shaw And Callum Thomas (2006) S. Shaw, C. Thomas Discussion Note: Social And Cultural Dimensions Of Air Travel Demand: Hyper-Mobility In The Uk?
- Steg, Bolderdijk Keizer, & Perlaviciute (2014) Steg, L., Bolderdijk, J., Keizer, K., & Perlaviciute, G. (2014). An Integrated Framework For Encouraging Pro-Environmental Behaviour
- Steg & Viek (2009) Steg, L., & Vlek, C. (2009). Encouraging Pro-Environmental Behaviour: An Integrative Review And Research Agenda.
- Venkatesh (2021) Venkatesh Et Al. Venkatesh, (2021). Unified Theory Of Acceptance And Use Of Technology
- Vermeir & Verbeke (2006) Vermeir, I., & Verbeke, W. (2006). Sustainable Food Consumption: Exploring The Consumer "Attitude - Behavioural Intention" Gap. Journal Of Agricultural & Environmental Ethics
- Wessling, J H (2016) Explaining Variance In National Electric Vehicle Policies, Environmental Innovation And Societal Transitions.
- Wieczorek (2018) Wieczorek, Anna J. (2018): Sustainability Transitions In Developing Countries. Major Insights And Their Implications For Research And Policy. In Environmental Science & Policy.
- Xiaoshu Cao (2017) X. Cao *Et Al.* Examining The Effects Of The Built Environment And Residential Self-Selection On Commuting Trips And The Related Co_2, Emissions: An Empirical Study In Guangzhou, China Transport. Res. Part D: Transp. Environ.
- Yanyong Gao (2014) Guo Et Al, Modelling Correlation And Heterogeneity In Crash Rates By Collision Types Using Full Bayesian Random Parameters Multivariate Tobit Model
- Yanyong Gao (2019) Guo Et Al. Modelling Correlation And Heterogeneity In Crash Rates By Collision Types Using Full Bayesian Random Parameters Multivariate Tobit Model

ANNEXURE

QUESTIONNAIRE

I collected the data from my collage Students with the use of convenience sampling I asked them questions regarding environmental concern, environmental behaviour in different use of five scale. In conclusion I come to know that every student has a

different thoughts on that, some of them are strongly agree with me and some students are disagree with my question and some students answered natural. As they are nigher agreed nor disagreed. I would like to thank all the students who helped me in the process of data collection & also thank full to all the students who give me their valuable time to complete this process.

ENVIRONMENTAL CONCERN

Form this section, we would like to understand your concerns towards the environment.

Please read out the statements and let us know your views presented in 5-point scale. Strongly Disagree-5, Disagree-4, Neutral-3, Agree-2, Strongly Agree-1

	ENVIRONMENTAL CONCERN	5	4	3	2	1
1	I am very concerned about the environment					
2	Humans are severely abusing the environment					
3	I would be willing to reduce my consumption to help protect the environment					
4	Major political change is necessary to protect the natural environment					
5	Anti-pollution laws should be enforced more strongly					

ENVIRONMENTLE BEHAVIOURS

From this section we would like to understand what kind of behaviors you exhibit towards the environment

	ENVIRONMENTAL BEHAVIOURS	5	4	3	2	1
1	I buy environmentally friendly products whenever possible					
2	I reduce household waste whenever possible					
3	I use products made from recycle material whenever possible					
4	I buy organic food whenever possible					
5	I am a member of an environmental organization					
6	I contributes money to an environmental organization					
7	I subscribe to an environmental magazine					
8	I would contact my political representative about an environmental issue					

OUTCOME FOR USING ENVIRONMENTAL FRIENDLY PRODUCTS

In this section we would like to understand the outcomes you would experience by using environmental friendly products.

	OUTCOME FOR USING ENVIRONMENTAL FRIENDLY PRODUCTS	5	4	3	2	1
1	Using environmental friendly products makes me feel better					
2	Using environmental friendly products makes my life more satisfying					
3	Using environmental friendly products makes my life happier					
4	Using environmental friendly products makes more optimistic					
5	Using environmental friendly products makes me think I am different					
6	Using environmental friendly products makes me more confident					
7	Using environmental friendly products makes me more positive about myself					
8	Using environmental friendly products brings me closer to my ideal self					

SWARRNIM
STARTUP & INNOVATION
UNIVERSITY
WHERE IDEAS COME ALIVE
INDIA'S FIRST UNIVERSITY FOR STARTUP

Sr. No. Swarrnim/RO/utilization/2021/11

Date: 17/02/2021

Statement of Expenditure/Utilization certificate

This is to certify that the research project sanctioned to **Prof. Lakhi Niraj Gareja, Swarrnim Institute of Technology, Swarrnim Startup and Innovation University, Gandhinagar, Gujarat,** in the academic year 2019-20 has been utilized as per the following details:

Title of Project	Amount Sanctioned in (Rs)	Amount disbursed in (Rs)		Actual Expenditure in (Rs)
		2019-2020	2020-2021	
Eco-Conscious Consumers: Examining the Role of Environmental Concern and Behavior in Sustainable Product Adoption	700000	400000	205600	605600

SWARRNIM STARTUP & INNOVATION UNIVERSITY ACCOUNT SECTION

Accounts/Finance officer

Swarrnim Startup and Innovation University

ASHIRVAD
RESEARCH FOUNDATION

"Sky-view", Plot No. 291, Nr. 17/22, Bus Stop, Sector-22, Gandhinagar-382022. Phone : 079-23221584 / 079-23224639
Mobile : 9825183865 E-mail : binal_joshi@yahoo.com

Date:21/06/2018

To,
Swarrnim Institute of Technology,
Bhoyan Rathod, Opposite IFFCO,
Near ONGC WSS, Adalaj Kalol Highway,
Gandhinagar, Gujarat - 382422.

Dear Researcher,

Subject: Sanction of Financial Assistance for Research Project

We are pleased to inform you that we have approved the financial assistance request for your research project titled **"HYBRID STRILING ENGINE."** We recognize the importance of your work and its potential to contribute significantly.
As per our agreement, we are sanctioning a total amount of **Rs. 1200000** to support. The details of the investigators/co-investigators are as follows as per your proposal letter:

Name of Principal investigator: Prof. Lakhi Niraj Gareja
Name of Co-investigators: Prof. Prashant Parmar, Shruti Naimish Vora, Prof.Hardik Prajapati, Prof. Vishal Chandel

This funding is intended to cover expenses incurred during the project, which is expected to be completed in **"12 months"**. We request that you provide us with regular updates on the project's progress and a final report summarizing the outcomes and impacts.

We are excited about this collaboration and look forward to seeing the advancements your research will bring. Should you have any questions or require further assistance, please do not hesitate to reach out.

Thank you for your commitment to innovation, and we wish you great success in your research.

It is further hereby informed that you will abide to follow all the guidelines/norms, terms, and conditions mentioned in the Research Scheme of the company. The principal investigator may contact for any further assistance.

All the best for the great research work ahead.

Sincerely,

Registrar
Swarrnim Startup & Innovation University
At : Boyan Rathod, Gandhinagar.

Swarrnim Startup & Innovation University
Bhoyan Rathod, Gandhinagar

Ragin Ravindrabhai Shah

“HYBRID STRILING ENGINE”

Research Project Report Submitted to

Ashirvad Research foundation

Submitted by:

Principal Investigator: Prof. Lakhi Niraj Gareja, Swarrnim Institute of Technology

Co investigator: Prof. Prashant Parmar, Shruti Naimish Vora, Prof.Hardik Prajapati, Prof. Vishal Chandel

Table of Contents

DECLARATION i
DEDICATION ii
ACKNOWLEDGEMENTS iii
TABLE OF FIGURES vi
NOMENCLATURE vii
OBJECTIVE STATEMENT 1
1 CHAPTER ONE: BACKGROUND 2
INTRODUCTION: 2
What‟s a Stirling engine? 2
A brief History of the Stirling engine 3
Why design a Stirling Engine? 4
Scope of design 5
Stirling Engine‟s place in a „renewable energy‟ world 5
2 CHAPTER TWO: LITERATURE REVIEW 6
Introduction 6
Basic Components 6
Operation and Configuration 7
Gamma Configuration 8
Alpha configuration 8
Beta Configuration 10
Carnot Cycle 11
The Stirling Cycle 12
Basic Stirling cycle 12
Analysis of an ideal Stirling engine with a regenerator 14
The project calculations 17
Fin Efficiency 19
Flywheel size calculation 21
Solar Energy 22

The sun 22
Harnessing the solar energy 23
Solar concentrator efficiency 25
3 CHAPTER THREE: DESIGN AND FABRICATION 26
DESIGN 26
INTRODUCTION 26
DESIGN PROCESS 26
THE DESIGN MANUAL 28
FABRICATION 28
INTRODUCTION 28
Project planning 28
Parts fabrication and assembly 29
Assembly 31
4 CHAPTER FOUR: FINDINGS AND DISCUSSION 37
TESTS RESULTS 37
TEST 1 37
TEST 2 37
TEST 3 37
CALCULATIONS 38
Engine efficiency 38
DISCUSSION 39
CONCLUSION 40
RECOMMENDATIONS 40
5 REFERENCES 42
APPENDIX A: STIRLING ENGINE DESIGN MANUAL 43
APPENDIX B BILL OF QUANTITIES 44
APPENDIX C ILLUSTRATIONS 45

TABLE OF FIGURES

Figure 2.1The gamma configuration Stirling engine 8
Figure 2.2: The Alpha configuration Stirling engine 9
Figure 2.3: The Beta configuration Stirling engine 10
Figure 2.4: The Carnot cycle on a T-S diagram 11
Figure 2.5: The Stirling cycle on a P-V & T-S diagram 12
Figure 2.6: The Stirling with cycle regenerator on a P-V & T-S diagram 14
Figure 2.7: The Stirling cycle on a P-V diagram showing M.E.P 17
Figure 2.8: Illustration of the cooling fins on the Heat sink cylinder 19
Figure 2.9: Distribution of solar energy on earth 22
Figure 2.10: Examples of parabolic reflectors 23
Figure 2.11: The side and front views of the Stirling engine being heated via solar 24
Figure 3.1: Stirling engine designs drawn using the Rhinoceros Software 26
Figure 3.2: First revision of the Stirling engine drawn using Autodesk Inventor 27
Figure 3.3: The Final Stirling Engine Design used in fabrication 27
Figure 3.4: Showing The Parts Before And After Assembly 36
Figure 5.1: Stirling Engine Technology being made use of in California 45

NOMENCLATURE

A_{cs}	Cross-Sectional area, [m^2]
Cp	Specific heat at P=const, [J/kg K]
Cv	Specific heat at V= const, [J/kg K]
E	Effectiveness
h	Specific enthalpy, [J/kg]
L	Length, [m]
P	Pressure, [Pa]
Q	Heat, [J]
R	Specific gas constant, [J/kg K]
S	Entropy, [J/K]
s	Specific entropy, [J/kg K]
T	Temperature, [K]
u	Velocity, [m/s]
V	Volume, [m^3]
W	Work, [J]
K	Thermal Conductivity Constant
r	Density
B_n	The Beale number

ABSTRACT

This project was set out to with an objective to explore the practicality of power production from a Hybrid Stirling engine. This would include research, design and fabrication. Hybrid here meant that the engine model would run on different sources of sufficient external heat to generate the desired motion. This was done to supplement the government‟s efforts to provide affordable electricity to rural and marginalized parts of Kenya.

With this end in sight, a thorough and comprehensive research was carried out on the working and configurations of Stirling engines. Research sources included the internet, engineering books on thermodynamics and engine machines as well consulting the project supervisor. In total, knowledge gathering took about six weeks.

After it was decided that the Gamma configuration would best achieve the intended objective, sketches were made. This was then followed by the first design that was drawn up using the Rhinoceros Software, that led to the second and later third (final) designs using the Autodesk Inventor Software.

After all the designs were approved by the project supervisor, an acquisition was made for funds and materials. This was then followed by fabrication, assembly and testing that span a period of 8 weeks. Test results revealed that the assembled engine had air leaks that mostly emanated from the piston cylinder. The piston cylinder was the highest precision part and also most expensive. The setback meant that the project needed more investment. Constrained by monetary resources, the project was concluded and further recommendations were drawn.

From the theoretical analysis, the Stirling engine designed had and efficiency of about 7.7%. This was pointed out that there were energy losses, which were attributed to friction and the engine having some out-of-balance masses. To rectify this, it was proposed that a kinematic assessment of the engine be carried out to eliminate any out of balance masses.

Upon completion of the project, it was recommended that more investment in the Stirling engine project needs to be made. Emerging economies such as India have turned to use of Stirling engines to provide electricity to the rural poor. In addition, developed economies such as the United States are taking advantage of this technology to generate electricity in „solar farms‟ using large solar powered stirling engines.

Kenya, which enjoys long spells of sunshine throughout the year in areas such as Garissa and Mandera, should take advantage of this abundance of solar energy to generate electricity. A Hybrid Stirling Engine would serve well to exploit this natural resource. It was therefore recommended that the Kenyan Government should partner up with academia to explore this alternative source of electricity.

OBJECTIVE STATEMENT

This project was set out to explore the practicality of power production from a Hybrid Stirling engine. This would include research, design and fabrication.

"Hybrid" in this sense means that, unlike conventional Stirling engines that are designed with one mode of heating in mind, our engine model would run on different sources of sufficient external heat to generate the desired motion.

In carrying out this project, we were focused on creating an engine model that could utilize heat from biomass, as well as take a "green turn" and take advantage of solar heat by use of solar concentrators.

Our target beneficiaries would be Kenyans living in the marginalized areas with little hope of getting access to electricity. Seeing as these people use biomass for their ordinary energy needs, the success of this project would afford these people a chance to have sustainable subsistent power in their homes.

Further, as the Government commits its resources to achieve the vision 2030, we took the challenge upon ourselves as academia to explore possibilities of aiding in rural electrification, in the wider goal of upgrading Kenyans‟ living standards.

In a nutshell, the aims of this project include the following:

- Research on working principle of Stirling engines
- Design of a Stirling engine that could be easily fabricated for small scale subsistence use
- Fabrication of a prototype Stirling engine and assess its performance
- Give a recommendation from the findings and a way forward

1. INTRODUCTION:

What‟s a Stirling engine?

A Stirling engine is a heat engine operating by cyclic compression and expansion of air at different temperature levels such that there is a net conversion of heat energy to mechanical work.

Like the steam engine, the Stirling engine is traditionally classified as an external combustion engine, as all heat transfers to and from the working fluid take place through the engine wall. This contrasts with an internal combustion engine where heat input is by combustion of a fuel within the body of the working fluid. Unlike a steam engine‟s (or more generally a Rankine cycle engine‟s) usage of a working fluid in both of its liquid and gaseous phases, the Stirling engine encloses a fixed quantity of air.[1]

As is the case with other heat engines, the general cycle consists of compressing cool gas, heating the gas, expanding the hot gas, and finally cooling the gas before repeating the cycle. The efficiency of the process is narrowly restricted by the efficiency of the Carnot cycle, which depends on the temperature between the hot and cold reservoir.

The Stirling engine is exceptional for of its high efficiency compared to steam engines, quiet in operation and the ease with which it can use almost any heat source. This is especially significant as the prices of conventional fuel prices rise in a more “green cautious” world.

Competition from Internal combustion

The invention of the internal combustion engine in the 1900‟s put the nail on the coffin for the Stirling type of engine because it generated more power and proved to be more practical in the automobile industry.

Due to the rigorous solar energy exploration taking place in the developed economies, this old technology is being given a newer and fresher approach.

In the Kenyan scenario, the Stirling engine hopes to offer energy to rural and marginalized areas where the most common sources of energy include:

- Biomass fuel –from burning of charcoal, firewood, rice husks, coal, maize cobs among others
- Biogas- which has become of great use in the rural areas for both cooking and lighting
- Solar heating- which has made its debut in the rural areas as an alternative means of cooking energy through use of solar concentrators.

A brief History of the Stirling engine

Reverend Robert Stirling

On September 27, 1816, Church of Scotland minister Robert Stirling applied for a patent for his economizer in Edinburgh, Scotland. The device was in the form of an inverted heat engine, and incorporated the characteristic phase shift between the displacer and piston that we see in all Stirling Engines today. [2]

The engine also featured the cyclic heating and cooling of the internal gas by means of an external heat source, but the device was not yet known as a Stirling Engine. That name was coined nearly one hundred years later by Dutch engineer Rolf Meijer to describe all types of closed cycle regenerative gas engines.

Stirling originally regarded his engine as a perpetual motion machine of the second kind (i.e. all heat supplied would be converted into work even though his original hot air engine did not include a cooling system.

Due to the invention of the more powerful internal combustion engine at the middle of the 19th century, the Stirling technology was abandoned. But even so, the Stirling engine had an extra advantage over the steam engine due to its low operating cost. Also, the steam engine was prone to major failures like explosions. The only major problem with the Stirling engine was its tendency to fail when the cylinder being heated became too hot.

Although improvements were made to curb up the problem, stiff competition from the internal combustion engine forced the hot air engine out of the commercial scene.

Over the years, researchers have continued on Stirling engines, working out many of the design solutions that are used today in low temperature differential Stirling engines.

Why design a Stirling Engine?

In the country‟s Vision 2030, the government committed itself to provide affordable universal electricity to its citizens.[3]To achieve this goal, the academia and investors should work closely and come up with a sustainable solution. To this end, for our final year project, we took the challenge upon ourselves to design and fabricate a small subsistent power generator.

This project aims to provide affordable electricity to the people in the marginalized parts of our country. Places in focus include Northern Kenya, the Coastal strip, and the remote upcountry. These marginalized parts of the country present the biggest challenge to supply affordable power. Compounding the complexity of this challenge, these places do not have economic significance for the national power distribution company, KPLC to invest in power transmission lines.

With this conspicuous power vacuum in sight, we set out to design an alternative source of power. To achieve this, we intended to use the locally available sources of energy, such as charcoal, firewood and biomass fuel, to generate subsistence power for domestic consumption. Thus, we sought to find a transducer that could convert the low calorific sources of energy available, while having economic sense at the back of our minds.

The Stirling engine was the perfect solution.

Our idea was to model a special Stirling engine that could generate power from both an open fire, such as a jiko or firewood stove, and have the potential to generate power on a sunny day using a solar concentrator. This ingenious idea would take advantage of both the available energy while taking a “green” turn and utilizing solar heat to supplement the power generated. Thus the HYBRID CONCEPT.

In addition to taking advantage of the local energy sources, the simplicity in fabrication of a Stirling engine meant that the overall cost of a unit would be within reach for many.

In the preliminary design, we hoped to achieve about 300rpm from the engine arrangement, and a potential of about 100watts. This in our view would be enough power to light a couple of energy saving bulbs, while at the same time powering a small FM tuner, and charging a mobile phone for the family.

This subsistence and sustainable source of power would have far reaching benefits to the marginalized communities. For instance, with this power source, a local green grocer would have electricity to extend trading hours, while children would have light to extend study hours.

All these benefits would have positive compounding benefits to Kenya, and aid the government in attaining the ambitious Vision 2030.

Scope of design

The hybrid Stirling engine we designed and fabricated was in two pieces: a normal Stirling engine that could be heated externally using an open flame and a detachable solar concentrator that could be placed in front of the Stirling engine to take advantage of solar heat.

A gamma configuration of the engine was chosen, whose working shall be explained further in this report.

The solar concentrating unit consisted of a solar reflector, similar to the ones being used in solar cookers in the most rural areas. Its design was simple and with the right focal length in the curved mirror, the heating of the displacer head would be most efficient.

The aim of choosing this design was to make the manufacturing cost of this engine low and keep it simple. The design and fabrication of the engine are also documented in this report.

Stirling Engine‟s place in a „renewable energy‟ world

Countries such as India have made investments in simple renewable energy solutions that have been able to make rural electrification possible to the poor. Companies such as Husk power systems[4] in India, generate electricity by burning rice husks in CNG[5] engines to produce electricity.

In the US, use of Stirling engines as a source of renewable energy is being explored. Companies such as Stirling Engine Systems plan to invest in large solar Stirling engines that generate power in excess of 500MW.

By 2030, the Kenyan government hopes get all Kenyans to be dependent on clean and efficient renewable sources of energy. The initial phases have been witnessed through the installation of wind farms at the Ngong hill and a lot of investment in Turkana on solar projects.

We view that the Stirling engine would also be an idea worth looking into. By investing into the research of this technology, with time, better and more compact & affordable models can be built for commercialized purposes and thus the goal of achieving close to 100% rural electrification will not seem like a pipe dream.

Thus early investment in this technology by the government would be a boost for the country‟s Energy Grid in future.

BUDGET ESTIMATE:

Category	Year 1	Year 2	Total (INR)
Stirling Engine Components (materials, parts):	150000	90000	240000
Prototype Construction (machining, fabrication):	75000	50000	125000
Measurement Tools (temperature sensors, pressure gauges):	50000	35000	85000
Other Materials (fuel sources, test fluids):	40000	25000	65000
Machinery Rental or Setup:	50000	30000	80000
Workspace Preparation (tools, workbenches, etc.):	10000	6000	16000
Lab Consumables (welding rods, lubricants, etc.):	30000	35000	65000
Prototype Testing (materials for testing, equipment):	50000	55000	105000
Environmental Testing (heat, pressure, and efficiency tests):	40000	45000	85000
Data Acquisition System (hardware/software):	35000	20000	55000
Data Analysis (software for simulation and analysis):	40000	23000	63000
xternal Consultant for Advanced Design/Analysis:	50000	27000	77000
Specialized Expert for Testing and Efficiency Optimization:	15000	10000	25000
Publication & Dissemination	40000	15000	55000
Travel & Conference Participation	20000	8000	28000
Contingency FuND	8050	7500	15550
Total (INR)	703050	481500	1184550

2 LITERATURE REVIEW

The Stirling engine has over the years evolved. The most common configurations include the Alpha, Beta and Gamma. These vary in the arrangement of the different parts including the displacer, piston and flywheel.

The Stirling engine operates on the Stirling cycle that has a theoretical efficiency close to the Carnot efficiency. In the theory developed later, it is noted that addition of a regenerator in the configuration improves the overall performance and increases the output power of the system.

Basic Components

A Stirling engine consists of a number of basic components, which may vary in design depending on the type and configuration. The most basic are outlined as follows:

- Power Piston and Cylinder

This consists of a piston head and connecting rod that slides in an air tight cylinder. The power piston is responsible for transmission of power from the working gas to the flywheel. In addition, the power piston compresses the working fluid on its return stroke, before the heating cycle. Due to the perfect air tight requirement, it is the most critical part in design and fabrication.

- Displacer Piston and Cylinder

The displacer is a special purpose piston, used to move the working gas back and forth between the hot and cold heat exchangers. Depending on the type of engine design, the displacer may or may not be sealed to the cylinder, i.e. it is a loose fit within the cylinder and allows the working gas to pass around it as it moves to occupy the part of the cylinder beyond.

- Source of Heat

The source of heat may be provided by the combustion of fuel, and since combustion products do not mix with the working fluid, the Stirling engine can run on an assortment of fuels. In addition, other sources such as solar dishes, geothermal energy, and waste heat may be used. Solar powered Stirling engines are becoming increasingly popular as they are a very environmentally friendly option for power production.

- Flywheel

The flywheel is connected to the output power of the power piston, and is used to store energy, and provide momentum for smooth running of the engine. It is made of heavy material such as steel, for optimum energy storage.

- Regenerator

It is an internal heat exchanger and temporary heat store placed between the hot and cold spaces such that the working fluid passes through it first in one direction then in the other. Its function within the system is to retain heat which would otherwise be exchanged with the environment. It thus enables the thermal efficiency of the cycle to approach the limiting Carnot efficiency.

On the flip side, the presence of regenerator (usually a matrix of fine steel wool), increases the “dead space” (unswept volume). This leads to power loss and reduces efficiency gains from the regeneration.

- Heat Sink

The heat sink is typically the environment at ambient temperature. For small heat engines, finned heat exchangers in the ambient air suffice as a heat sink. In the case of medium to high power engines, a radiator may be required to transfer heat from the engine.

Operation and Configuration

Since the Stirling engine is a closed cycle, it contains a fixed mass of gas called the "working fluid", most commonly air, hydrogen or helium. In normal operation, the engine is sealed and no gas enters or leaves the engine. No valves are required, unlike other types of piston engines. The Stirling engine, like most heat engines, cycles through four main processes: cooling, compression, heating and expansion. This is accomplished by moving the gas back and forth between hot and cold heat exchangers, often with a regenerator between the heater and cooler. The hot heat exchanger is in thermal contact with an external heat source, such as a fuel burner, and the cold heat exchanger being in thermal contact with an external heat sink, such as air fins. A change in gas temperature will cause a corresponding change in gas pressure, while the motion of the piston causes the gas to be alternately expanded and compressed.

When the gas is heated, because it is in a sealed chamber, the pressure rises and this then acts on the power piston to produce a power stroke. When the gas is cooled the pressure drops and this means that less work needs to be done by the piston to compress the gas on the return stroke, thus yielding a net power output.

In summary, the Stirling engine uses the temperature difference between its hot end and cold end to establish a cycle of a fixed mass of gas, heated and expanded, and cooled and compressed, thus converting thermal energy into mechanical energy. The greater the temperature differences between the hot and cold sources, the greater the thermal efficiency. The maximum theoretical efficiency is equivalent to the Carnot cycle; however the efficiency of real engines is less than this value due to friction and other losses.

The specific operation of Stirling engines differs from one configuration type to another. These are distinguished by the way they move air between the hot and cold sides of the cylinder. There are three most common basic configurations:

- **Gamma type:** This design also uses a mechanical displacer to push the working gas between the hot and cold sides of the cylinder, but the displacer is housed in a separate cylinder for easier mechanical fabrication.
- **Alpha type:** This design has independent cylinders and a gas driven between the hot and cold spaces.
- **Beta type:** This design uses an insulated mechanical displacer to push the working gas between the hot and cold sides of the cylinder. The displacer piston runs though the power piston, for less "dead space".

Gamma Configuration

A gamma Stirling is simply a beta Stirling in which the power piston is mounted in a separate cylinder alongside the displacer piston cylinder, but still connected to the same flywheel. The gas in the two cylinders can flow freely between them and remain a single body. This configuration produces a lower compression ratio but mechanically simpler and often used in multi-cylinder Stirling engines.

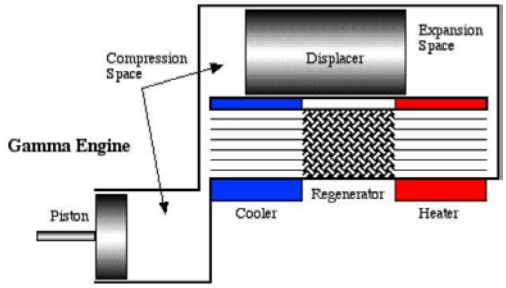

Figure 2.1The gamma configuration Stirling engine[6]

Alpha configuration

An Alpha Stirling contains two pistons in separate cylinders, one hot and one cold. The hot cylinder is situated inside the high temperature heat exchanger and the cold cylinder is situated inside the low temperature heat exchanger. This type of engine has a high-to-power volume ratio but has technical problems due to the usually high temperature of the hot piston and durability of its seals.

6

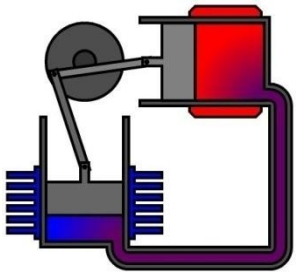

1. Most of the working gas is in contact with the hot cylinder walls, it has been heated and expansion has pushed the hot piston to the bottom of its travel in the cylinder. The expansion continues in the cold cylinder, which is 90° behind the hot piston in its cycle, extracting more work from the hot gas.

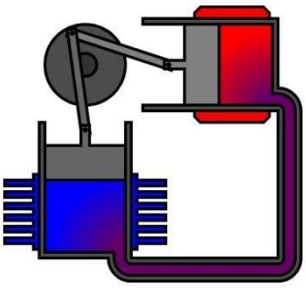

2. The gas is now at its maximum volume. The hot cylinder piston begins to move most of the gas into the cold cylinder, where it cools and the pressure drops.

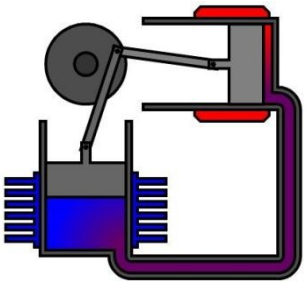

3. Almost all the gas is now in the cold cylinder and cooling continues. The cold piston, powered by flywheel momentum (or other piston pairs on the same shaft) compresses the remaining part of the gas.

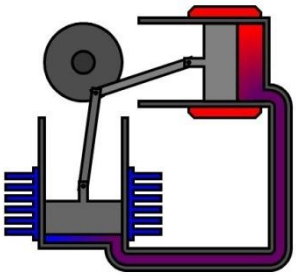

4. The gas reaches its minimum volume, and it will now expand in the hot cylinder where it will be heated once more, driving the hot piston in its power stroke.

Figure 2.2: The Alpha configuration Stirling engine[7]

Beta Configuration

A Beta Stirling has a single power piston arranged within the same cylinder on the same shaft as a displacer piston. The displacer piston is a loose fit and does not extract any power from the expanding gas but only serves to shuttle the working gas from the hot heat exchanger to the cold heat exchanger. When the working gas is pushed to the hot end of the cylinder it expands and pushes the power piston. When it is pushed to the cold end of the cylinder it contracts and the momentum of the machine, usually enhanced by a flywheel, pushes the power piston the other way to compress the gas. Unlike the alpha type, the beta type avoids the technical problems of hot moving seals.

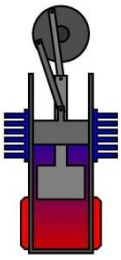

1. Power piston (dark grey) has compressed the gas, the displacer piston (light grey) has moved so that most of the gas is adjacent to the hot heat exchanger.

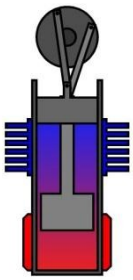

2. The heated gas increases in pressure and pushes the power piston to the farthest limit of the power stroke.

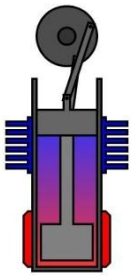

3. The displacer piston now moves, shunting the gas to the cold end of the cylinder.

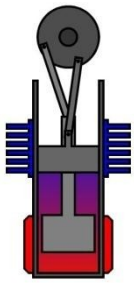

4. The cooled gas is now compressed by the flywheel momentum. This takes less energy, since when it is cooled its pressure drops.

Figure 2.3: The Beta configuration Stirling engine

Carnot Cycle[8]

Carnot, a French Scientist showed that the most efficient possible cycle is one in which all the heat supplied is at one fixed temperature, and all the heat rejected is rejected at a lower temperature. The cycle therefore consists of two isothermal processes joined by two adiabatic processes. Since all processes are reversible, then the adiabatic processes in the cycle are also isentropic. The cycle is most conveniently represented on a T-S diagram as shown below[9].

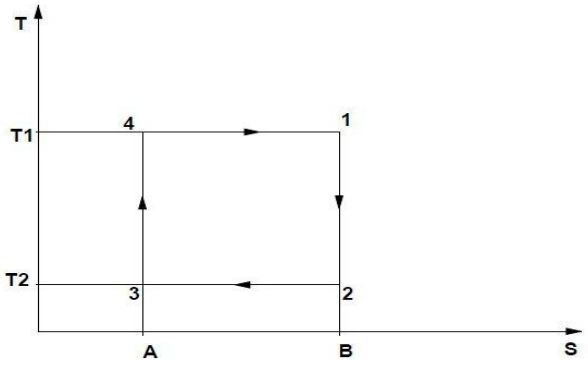

Figure 2.4: The Carnot cycle on a T-S diagram

It can be seen that the gross heat supplied Q_1 is given by the area 41BA4,

$$Q1 = area\ 41BA4 = T1(s_B - s_A)$$

Similarly, the net heat supplied, ΣQ, is given by the area 41234,

$$\mathrm{Z}Q = (T_1 - T_2)(s_B - s_A)$$

Hence the Carnot cycle efficiency is:

$$5_{Carnot} = \frac{(T_1 - T_2)(s_B - s_A)}{T_1(s_B - s_A)}$$

$$\mathrm{y}_{Carnot} = 1 - \frac{T_2}{T_1} \qquad (2.1)$$

[8] *Thermodynamics: An Engineering Approach, 5th edition* by Yunus A. Çengel and Michael A. Boles, Chpt6

[9] *T.D. EASTTOP and A. McCONKEY,2009, Fifth impression, Applied Thermodynamics for engineering technologists. Chapter 5: Heat Engine Cycle, 163-165*

The Stirling Cycle

Basic Stirling cycle

The Stirling cycle comes closest to the Carnot cycle efficiency while having a higher work ratio. Despite the fact that the efficiency may not be practical in real fabrication and testing, the Stirling engine gives the best output.

The idealized Stirling cycle consists of four thermodynamic processes acting on the network of the fluid;

i. 2-3: Isothermal expansion: the expansion space and associated heat exchanger are maintained at a constant high temperature and the gas undergoes isothermal expansion absorbing heat from the heat source.
ii. 3-4: Constant volume heat removal: the gas is passed through a regenerator where it cools transferring heat to the regenerator for use in the next cycle.
iii. 4-1: Isothermal compression: the compression space and associated heat exchanger are maintained at a constant low temperature so that the gas undergoes isothermal compression, rejecting heat to the cold sink.
iv. 1-2: Constant volume heat addition: the gas passes back through the regenerator where it recovers much of the heat transferred in (2) above, heating up on its way to the expansion space.

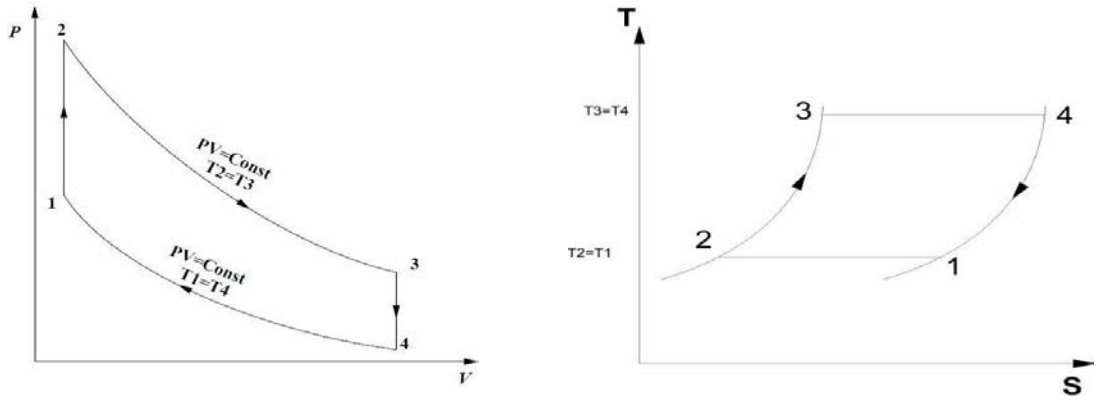

Figure 2.5: The Stirling cycle on a P-V & T-S diagram

Theoretically, heat is supplied to the working fluid in the process 2-3 where the gas expands isothermally ($T_2 = T_3$). Further, heat is rejected to an external heat sink in the process 4-1 where the gas is compressed isothermally ($T_1=T_4$). The two isothermals are connected by the constant volume processes 1-2 and 3-4, during which the temperature changes are equal to ($T_2 - T_1$).

Heat supplied from the hot source:

$$Q_{2-3} = -W_{2-3} = RT_2 ln\left(\frac{p2}{p_3}\right) per\ unitmassofgas \quad (2.2)$$

Similarly, heat rejected to the cold sink:

$$W_{4-1} = RT_1 ln\left(\frac{p_1}{p_4}\right)$$

Therefore;

$$\sum Q = RT_2 ln\left(\frac{p_2}{p_3}\right) - RT_1 ln\left(\frac{p_1}{p_4}\right)$$

And as the cycle efficiency, $5 = \sum Q / Q_{2-3}$ therefore

$$5 = 1 - \frac{RT_1 ln\left(\frac{p2}{p3}\right)}{RT_2 ln\left(\frac{p1}{p_4}\right)}$$

For the constant volume process 1-2,

$$\frac{p_2}{p_1} = \frac{p_3}{p_4} and \frac{p_2}{p_3} = \frac{p_1}{p_4}$$

Therefore;

$$5 = 1 - \frac{T1}{T_2} = theCarnotefficiency \quad (2.3)$$

This shows that the Stirling cycle has the same efficiency as the Carnot cycle.

The work ratio for the Stirling cycle is calculated as:

$$Workratio = \frac{networkoutput}{grossworkoutput} = \frac{-W_{2-3} + W_{4-1}}{-W_{2-3}}$$

$$= \frac{\sum Q}{Q_{2-3}} = cycleefficiency, 5 \quad (2.4)$$

I.e. since $-W_{2-3} = Q_{2-3}$

Analysis of an ideal Stirling engine with a regenerator Below is a plot of P-V diagram with the regenerator effect shown.

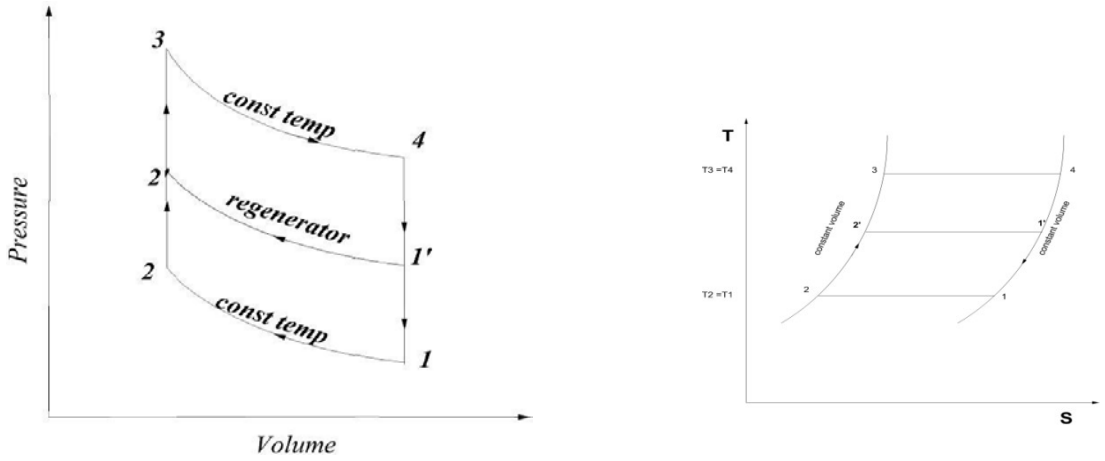

Figure 2.6The Stirling with cycle regenerator on a P-V & T-S diagram

In most applications, the regenerator is a wire mesh matrix that is placed between the heater and the cooler. It acts as a thermal sponge.

The effectiveness of the refrigerator, E is defined as:

$$E = \frac{T_{2^F} - T_1}{T_3 - T_1} \tag{2.5}$$

Therefore the efficiency of a Stirling engine changes because the heat transferred changes to Q_{2^F-3}

This is seen to change from the Stirling cycle efficiency,

$$5_E(engine\ efficiency) = \frac{W_x}{Q_s}$$

Where W_x= net work energy output

Q_s=heat energy supplied

$$W_x = W_{3-4} + W_{1-2}$$

$$= \int_3^4 P\,dv + \int_1^2 P\,dv$$

$PV = MRT, assuming\ perfect\ gas$

$$W_x = MRT_3 \int_3^4 \frac{d_v}{v} + MRT_1 \int_1^2 \frac{d_v}{v}$$

$$= MRT_3 \ln\left(\frac{v_4}{v_3}\right) + MRT_1 \ln\left(\frac{v_2}{v_1}\right)$$

$$= MRT_3 \ln\left(\frac{v_4}{v_3}\right) - MRT_1 \ln\left(\frac{v_1}{v_2}\right)$$

$$= MRT_3 \ln(rv) - MRT_1 \ln(rv) \qquad (2.6)^{10}$$

Where $rv = \frac{v4}{v_3} = \frac{v1}{v_2}$, i.$e\ the\ engine\ cycle\ compression\ ratio$

Further;

$$W_x = MR \ln(rv)\,(T_3 - T_1)$$

Defining $\frac{T1}{T_3} = (rt)$, ie $the\ engine\ temperature\ ratio$

Hence,

$$W_x = MR \ln(rv)\, T_3(1 - (rt))$$

Since, $C_p - C_v = R$

$$\frac{C_p}{C_v} - 1 = \frac{R}{C_v}$$

$$\gamma - 1 = \frac{R}{C_v}$$

$$R = C_v(\gamma - 1)$$

Thus substituting R into the equation of work output,

$$W_x = MC_vT_3 - (1 - (rv))(\gamma - 1)\ln(rv) \qquad (2.7)$$

Therefore with the temperature and compression ratios and assuming a mass of gas contained, theoretical work output can be estimated.

[10] T.D. EASTTOP and A. McCONKEY,2009, Fifth impression, Applied Thermodynamics for engineering technologists. *Chapter 5: Heat Engine Cycle, 163-165*

Next, to access heat input to the engine;

$$Q_s = Q_{2^F3} + Q_{34}$$

$$Q_{2^F3} = MC_v(T_3 - T_{2^F})$$

$$Q_{34} = MRT_3 \ln(rv)$$

Thus,

$$Q_s = MC_v(T_3 - T_{2^F}) + MRT_3 \ln(rv)$$

But, $R = C_v(\gamma - 1)$

$$Q_s = MC_v(T_3 - T_{2^F}) + MC_v(\gamma - 1) \ln(rv)$$

$$Q_s = MC_v[(T_3 - T_{2^F}) + (\gamma - 1)\ln(rv)]$$

Introducing the generator effectiveness, E,

Such that, $T_{2^F} = T_3[E + (1 - E)(rv)]$

Thus,

$$Q_s = MC_vT_3[(1 - E)(1 - (rt)) + (\gamma - 1)\ln(rv)] \quad (2.8)$$

Thus the thermal efficiency is;

$$5_E = \frac{W_x}{Q_s} = \frac{MC_v \ln(rv)T_3(\gamma - 1)(1 - (rt))}{MC_vT_3[(1 - E)(1 - (rt)) + (\gamma - 1)\ln(rv)]}$$

$$= \frac{(\gamma - 1)(1 - (rt)\ln(rv)}{(1 - E)(1 - (rt) + (\gamma - 1)\ln(rv)}$$

Assuming an ideal effectiveness of the regenerator, E=1, thus,

$$5_E = \frac{(\gamma - 1)(1 - (rt))\ln(rv)}{(\gamma - 1)\ln(rv)}$$

$$= 1 - (rt) \quad (2.9)$$

But, $\frac{T1}{T_3} = (rt)$, ie *the engine temperature ratio*

$$5_E = 1 - \frac{T_1}{T_3}, \textit{same as Carnot and Stirling efficiency}$$

Next, we define a dimensionless work output parameter,$W_o$that is formulated on the ideal enginethat has been described.

$$W_o = \frac{\textit{Indicated mean effective pressure}}{P_1}$$

Where the mean effective pressure (M.E.P) is given by equivalent area as occupied by the enclosed P-V area

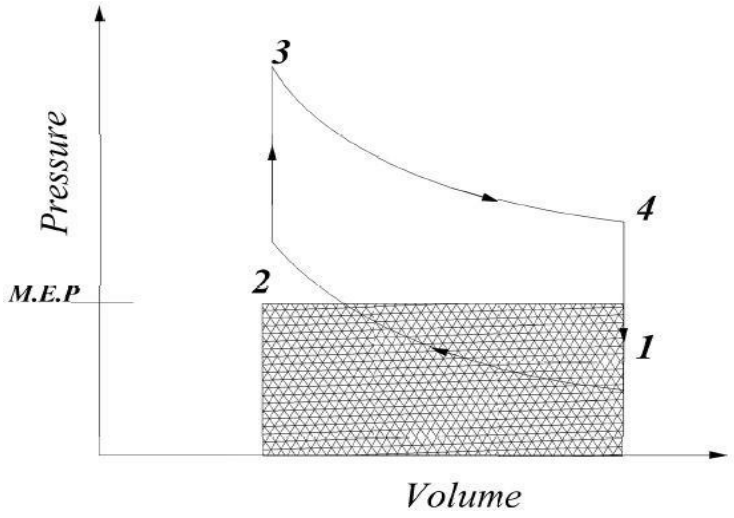

Figure 2.7: The Stirling cycle on a P-V diagram showing M.E.P

The shaded area is equivalent to the enclosed area.

Thus,

$$W_o = (1 - (rt))(rv)\frac{\ln(rv)}{(rt)(\gamma - 1)} \qquad (2.10)$$

The above equation can be used to give an estimate of the size and power output of an engine (in terms of speed and pressure).

The project calculations

We intended to design a small Stirling engine with an output of approximately 50W and test how much power can be tapped from it.

The engine was to be heated by solar heat, but for the fabrication, we intended to use a torch flame.

Some of the designs we made were based on two approaches:

a) <u>The Mean Effective pressure analogy;</u>

Assuming we achieve a temperature ratio of 600°C:50°C (hot to cold)

From equation (4) derived earlier;

$$W_o = (1-(rt))(rv)\frac{\ln(rv)}{(rt)(\gamma-1)}$$

Where approximately,

$$(rt) = temperature\ ratio = \frac{(50+273.15)}{(600+273.15)} = 0.37$$

$$(rv) = compression\ ratio = \frac{v_1}{v_2} = \frac{750\times10^3 mm^3}{125\times10^3 mm^3} = 6$$

Thus,

$$W_o = (1-0.37)\times 6 \times \frac{\ln(6)}{0.37\times 0.4} = 45 W atts$$

With the above assumptions of temperature and compression ratios, the Stirling engine designed can output an estimated ≈**45Watts**

It is noted that the values of the volume are taken from the model parameters, while the values for the temperature are taken from the desired design parameters.

b) <u>Beale equation:</u>

The power output from Stirling engine can be estimated in theory by Baele equation[11].

$$Power(W) = N_b \times Mean\ effective\ Pressure\ in\ MPa \times Swept\ volume(cm^3) \times Rotation\ in\ Hz \qquad (2.11)$$

Where Nb is the Baele number=0.1112

[11] *B. Kongtragool, S. Wongwises / Renewable and Sustainable Energy Reviews 7 (2003) 131–154*

Designing the swept volume to be 10cm long and 4cm in diameter,

$$Swept\ volume = \pi \times (\frac{4^2}{4}) \times 10 = 125.7cm^3$$

From reference empirical values[12], taking the internal mean effective pressure in the chamber (power cylinder) to be 1Mpa,

And taking a power output of 45W as was done earlier, the speed of rotation can be estimated

$$45 = 0.1112 \times (1 \times 10^6) \times (125.7 \times 10^{-6}) \times R$$

Therefore, $R = 3.22Hz$

$$= 184rpm$$

Thus an engine with a swept volume of 125.7 cm^3 and a temperature ratio of hot to cold of 873.15 : 325.15K and a mean effective pressure of 1Mpa in the power cylinder will in theory produce an estimated 45Watts while running at 184 rpm.

This output would be tapped using a generator or dynamo to charge a small battery.

Fin Efficiency:

The heat sink cylinder has 4 annular fins making contact with its surface. i.e.

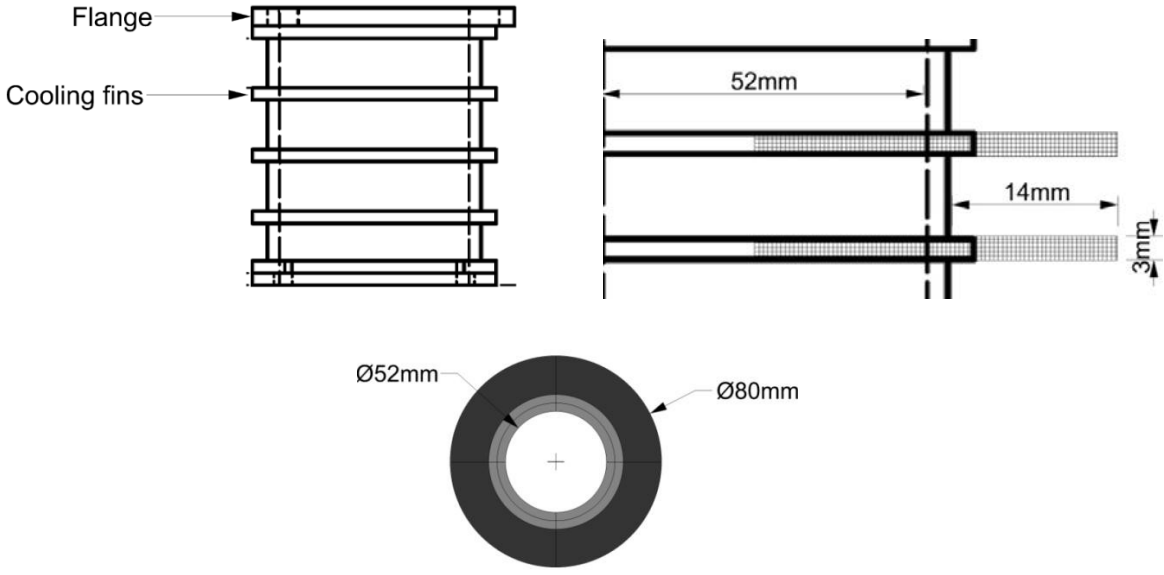

Figure 2.8: Illustration of the cooling fins on the Heat sink cylinder

[12] *B. Kongtragool, S. Wongwises / Renewable and Sustainable Energy Reviews 7 (2003) 131–154*

.

As heat flows from the root of a fin to its tip, temperature drops because of the fin material‟s thermal resistance. The temperature difference between the fin and surrounding fluid is therefore greater at the root than at the tip, causing a corresponding variation in heat flux. Therefore, increases in fin length result in proportionately less additional heat transfer. To account for this effect, fin efficiency ϕ is defined as the ratio of the actual heat transferred from the fin to the heat that would be transferred if the entire fin were at its root or base temperature;

$$\phi = \frac{q}{hA_s(t_r - t_e)} \tag{2.12}$$

Where q is heat transfer rate into/out of the fin‟s root,

t_e is temperature of the surrounding environment,

t_r is temperature at fin root, and

A_s is surface area of the fin.

However, using Schmidt‟s empirical solution[13], an easier analysis is given by:

$$\phi = \frac{\tanh(mr_b Z)}{mr_b Z} \tag{2.13}$$

Where, r_b is the radius of the tube,

r_e is the fin tip radius

$m = \sqrt{2\,h/k\delta}$

δ = fin thickness = 0.003m

h = surface heat transfer coefficient $= 55w/m^2$

k= thermal conductivity coefficient of the material[14] $= 32\mathrm{w/m}$

[13] Schmidt, T.E. 1949. Heat transfer calculations for extended surfaces. *Refrigerating Engineering* 4:351-57.

Z is given by; $$Z = [(r_e/r_b) - 1][1 + 0.35\ln(r_e/r_b)] \quad (2.14)$$

Therefore, from the available materials, the fins efficiency was calculated by substituting the actual parameters as shown below;

$$Z = [(0.04/0.025) - 1][1 + 0.35\ln(0.04/0.025)] = 0.6987$$

$$m = \sqrt{\frac{2 \times 55}{32 \times 0.003}} = 33.85$$

And therefore,

$$\phi = \frac{\tanh(33.85 \times 0.025 \times 0.6987)}{33.85 \times 0.025 \times 0.6987} = 0.897$$

Therefore, using the designed fins of outer an outer diameter of 80mm, the fins would achieve an efficiency of up to 89.7%.

Flywheel size calculation

The flywheel was incorporated to store the momentum generated by the engine. Thus, the flywheel mass had to be sizable enough to achieve this. The following is some simple calculation that aided in estimating the desired size.

Power output desired was 45 watts. Thus the flywheel needed to store this energy and allow smooth rotation of the piston in the cylinder.

$$Energy\ stored\ by\ a\ flywheel = \frac{1}{2} \times I \times \omega^2 \quad (2.15)$$

Where $I, second\ moment\ of\ Inertia = \frac{1}{2} \times Mass \times Radius^2$

$$\omega, rotation\ per\ minute, = 184rpm\ as\ calculated\ by\ the\ Baele\ equation$$

Therefore, making the mass, M, the subject of the formula and solving,

[14] Heat and mass transfer by R.K. Rajput, thermal conductivity for steel taken as 20-45W/mK

$$Mass \times Radius^2 = \frac{4 \times Energy\ stored}{\omega^2}$$

$$= \frac{4 \times 45}{184^2} = 5.32 \times 10^{-3} kgm^2$$

Therefore, from the available material of 6mm thickness, a flywheel of 0.13m in diameter of mild steel was selected. The flywheel had a mass of 0.6kg.

Solar Energy

The sun

The sun continually irradiates the earth at a rate of about 1.74 x 10^{14} kW. If we imagine this energy to be distributed over a circular disk with the earth's diameter, the solar radiation is about 1367W/M^2 as measured by satellites abode the atmosphere.

The temperature of the sun varies from tens of millions of Kelvins in its core to between 4000 & 6000K at its surface where most of the sun‟s thermal radiation originates.

The wavelength distribution of the suns energy is not quite that of a black body, but it may be approximated as such.[15]

Energy from the sun is distributed as shown in the diagram below:

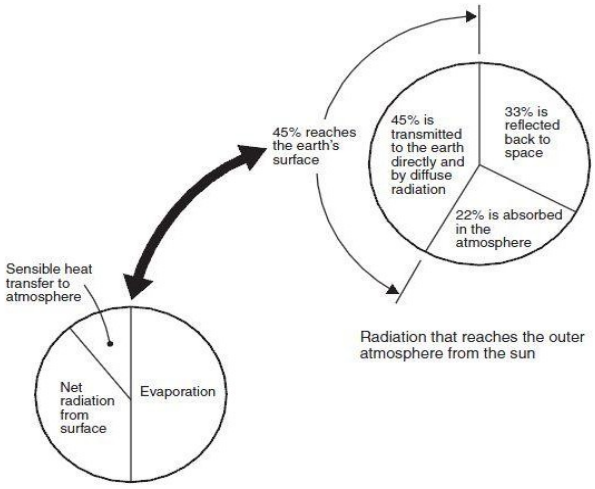

Figure 2.9: Distribution of solar energy on earth

[15] *Leinhard IV, J. H. (2004). A heat Transfer Text book 3rd Edition. Chapter 10.6*

The figure shows what becomes of the solar energy that impinges on the earth if we average it over the year and the globe taking into account of all the kinds of weather.

Only about 45% of the suns energy reaches the earth‟s surface. The mean energy received is about 235W/M^2 if averaged over the surface and the year.

Solar radiation reaching the earth‟s surface includes direct radiation that has passed through the atmosphere and diffuse radiation that has been scattered but not absorbed by the atmosphere.

Harnessing the solar energy

For solar heating, we incorporated a parabolic solar concentrator that could be attached to the Stirling engine if need arose.

A solar concentrator is a device that optically reflects and focuses incident solar energy onto a small receiving area. As a result of this concentration, the intensity of the solar energy is magnified, and the temperatures that can be achieved at the receiver (called the "target") can approach several hundred or even several thousand degrees Celsius. The concentrators must move to track the sun if they are to perform effectively. Our concentrator in this case was a parabolic mirror, same one that is used for solar cookers as shown in the figure below;

Figure 2.10: Examples of parabolic reflectors

When a three dimensional parabola (i.e. a paraboloid) is aimed at the sun, all the light that falls upon its mirrored surface is reflected to a point known as the focus. If a black cooking pot is placed at the focus it will absorb the light‟s energy and become very hot.

A satellite dish is an example of a paraboloid that can be made into a cooker. Parabolic Solar cookers heat up quickly and are used like a standard stovetop range to sauté or fry foods, boil water, or even bake bread. They can also be used to generate steam, power Stirling engines,

crack water to produce H_2 gas, and even plasma matter. It is easy to see in today"s world that this shape is successful in its use.
The detachable concentrator will be as shown below:

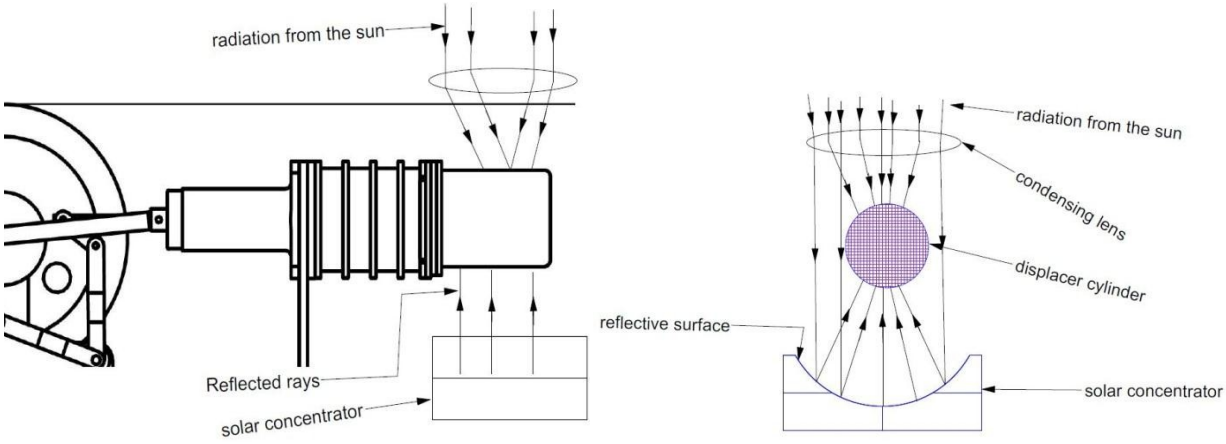

Figure 2.11: The side and front views of the Stirling engine being heated via solar

To increase the intensity of the sun, we thought it would be a great idea to include a lens in the concentrating unit as an option. The focal point of the concentrator has to be calculated in order to know how far the displacer should be from the concentrator
Example of a calculation; if a parabolic mirror is 20 cm across at its edge and is 6 cm deep,
Drawing the parabola used to form the dish on a rectangular coordinate system so that the vertex of the parabola is at the origin and its focus is on the positive y-axis. i.e.

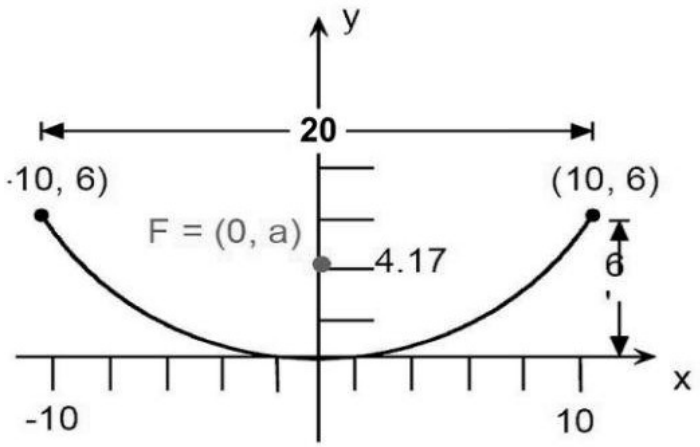

The form of the equation of the parabola is x^2 $4ay$ = and its focus is at (0, a).Since (10, 6) is a point on the graph, the equation is

$$10^2=4a\ (6)$$

$$100=24a$$

Therefore, a =100/24 =4.17cm

The heat source will be 4.17cm from the center vertex of the dish in direct line of sight toward the sun.

Solar concentrator efficiency

The efficiency of the solar receiver providing a heat source of T_H = 700K and a heat sink at temperature T^o = 300K can be estimated as;

$$5 = 5_{Receiver} - 5_{Carnot}$$

$$\text{Where, } 5_{Carnot} = 1 - \frac{T^o}{T_H}$$

$$\text{And, } \quad 5_{Receiver} = \frac{Q_{Absorbed} - Q_{lost}}{Q_{solar}}$$

Where Q_{solar}, $Q_{Absorbed}$, Q_{lost} are respectively the incoming solar flux and the fluxes absorbed and lost by the system solar receiver.

For a solar flux I=1367W/m^2 concentrated 10 times with an efficiency 5_{0ptics} on the system receiver and lost by the solar receive.

$$Q_{solar} = 5_{0ptics} ICA \qquad (2.16)$$

$$Q_{Absorbed} = \alpha Q_{solar} \qquad (2.17)$$

For simplicity, assuming losses by radiation only, for a radiating area A, and emissivity, applying the Stefan-Boltzmann law yields:

$$Q_{solar} = Ac\sigma T_H^4 \qquad (2.18)$$

Substituting these equations to the overall efficiency equation and assuming perfect optics for simplicity ($5_{0ptics} = 1$)

$$5 = (\alpha - \frac{\sigma \varepsilon T_H^4}{IC}) (1 - \frac{T^o}{T_H}) \qquad (2.19)$$

$$5 = (0.15 - \frac{5.67 \times 10^{-8} \times 0.05 \times 700^4}{1367 \times 10}) (1 - \frac{300}{700})$$

$$5 = 5.7\%$$

3. DESIGN AND FABRICATION

DESIGN

INTRODUCTION

The Gamma configuration was used in design, with a separate chamber for the displacer, for ease in fabrication. The heating chamber was given a special design to facilitate heating using both an open flame as well as solar heat. The solar concentrator was then designed to be detachable, for use as hybrid.

To ensure the model as cost effective as possible, we made most dimensions that would enable fabrication from scrap metal.

DESIGN PROCESSInitial designs

The design process was started off with simple hand sketches that were then drawn using CAD tools. The first sketches, shown in Fig 3.1, were drawn using the Rhinoceros Software. These preliminary sketches were too simple and did not consider machine dynamics that had to be taken into account. These sketches, however, were the first step towards project actualization.

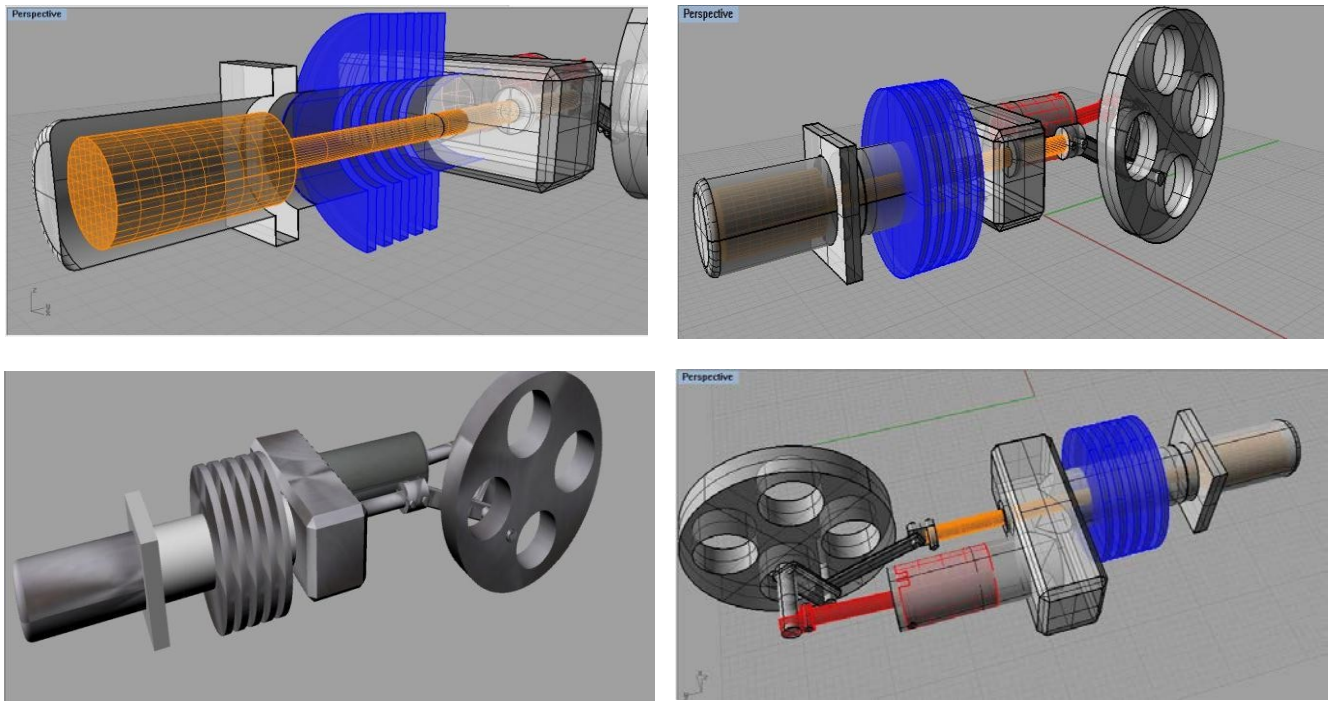

Figure 3.1: Stirling engine designs drawn using the Rhinoceros Software

First revision designs

The revised designs, drawn on the Autodesk Inventor software, were better in kinematics and gave the best simulation on a computer. This design, shown in Fig 3.2 was the closest to finally getting the Stirling engine final design.

It is noted here that this first revision of the design was not used because the connectors used in design would be too hard to fabricate. Further, the heating portion had to be changed in design to counter overheating of the system.

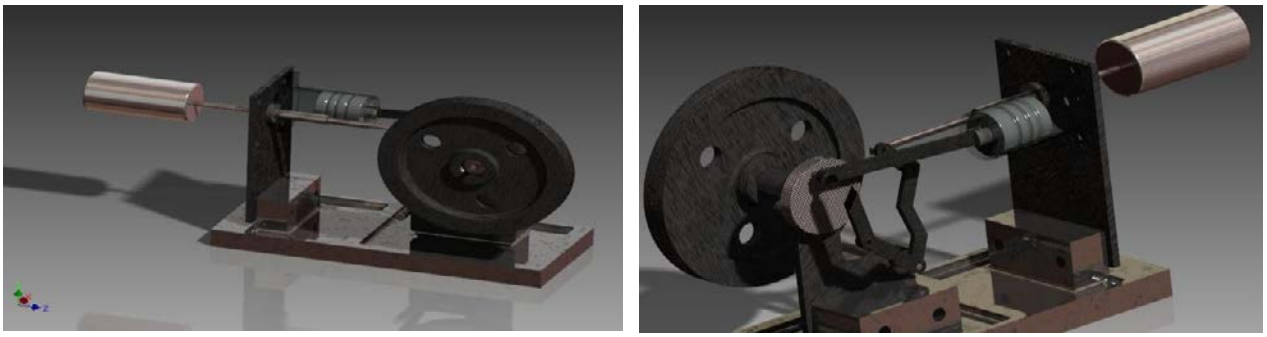

Figure 3.2: First revision of the Stirling engine drawn using Autodesk Inventor

Second revision - Final designs

After the final adjustments, the final design shown in Fig. 3.3 was drawn using Autodesk Inventor. The revisions made included a new heating chamber that made it easy to heat using an open flame.

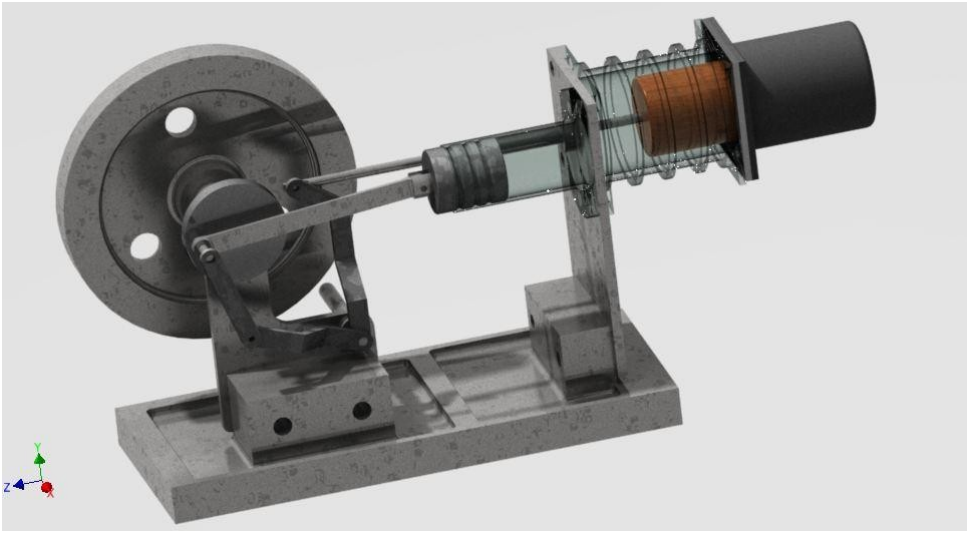

Figure 3.3: The Final Stirling Engine Design used in fabrication

THE DESIGN MANUAL

See attached copy of the design manual used in fabrication - Appendix A

FABRICATION

INTRODUCTION

Most of the project‟s parts were fabricated in the University‟s Mechanical Engineering workshop. It was however noted that some high precision parts such as the piston cylinder couldn‟t be machined in the workshop. This is because the machines available were old and because of this, the work pieces are prone to vibrations during machining which is not ideal for high precision parts especially due to the finishing.

For this reason, these high precision parts were taken to engine block specialists in Nairobi‟s Kirinyaga Road for machining. In addition, the piston was bought as a complete piece. Finally, the base board was machined at the University of Nairobi FABLAB. Using the ShopBot, a CNC machine, the piece of wood was cut to precision, and then some writing etched using the LASER cutting machine.

In total, it took us about seven weeks to fabricate from start to completion. A further three weeks were consumed in testing the engine‟s performance.

The fabrication was done by close assistance and supervision of technicians at the workshop, whose invaluable help we enjoyed and appreciated.

Project planning

The following is a summary of the planning of the project, from its inception to completion

PROJECT STAGES	**TIME TAKEN TO COMPLETE (IN WEEKS)**																			
	1	**2**	**3**	**4**	**5**	**6**	**7**	**8**	**9**	**10**	**11**	**12**	**13**	**14**	**15**	**16**	**17**	**18**	**19**	**20**
RESEARCH	■	■	■	■	■	■														
DESIGN			■	■	■	■	■	■	■	■	■	■								
MATERIAL & FUND AQUISITON													■	■	■					
FABRICATION & ASSEMBLY														■	■	■	■	■	■	■
TESTING																		■	■	■
DOCUMENTATION	■	■	■	■	■	■	■	■	■	■	■	■	■	■	■	■	■	■	■	■

Table 3.1: SCHEDULE OF OPERATIONS

In the initial stages of this project, 6 weeks were used for research of the project. The research included gathering information from books (see ref) about Stirling engines, their history, and theory and also made investigations about solar energy.

The 2nd stage of the project was initialized 2 weeks after after the research of the project was initialized. This stage included reviewing of old designs and making preliminary sketches. From this review, it was decided that the gamma configuration was best suited for our design & to test the viability of the solar energy. In addition, it was simple to fabricate and its design could easily accommodate the solar concentrator proposed.

The 3rd stage of the project was initialized in the 13th week and it involved deciding what materials to use from what was readily available. During this same period, the designs were taken for approval and request for funding made.

The 4th stage involved fabrication & assembly, which took 8 weeks to complete. This fabrication took place at the University of Nairobi Mechanical Engineering workshops, the UoN FabLab and also outsourcing some of the work to specialists in Engine servicing.

In the 5th stage, testing started immediately after the fabrication of the parts was completed. From the tests, minor adjustments continually took place and more tests were carried out for a period of 2 weeks.

The documentation of this project was carried out throughout, from its inception to completion.

Parts fabrication and assembly

The table below shows a brief description of the fabrication process for each part.

Part No.	**Part Name**	**Fabrication process involved**
1.	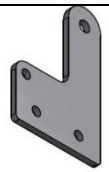 Bearing plate	-Chain Drilling & Filing -Drilling
2.	Crank shaft	-Turning -Drilling
3.	Crank web	-Cutting Profile On Lathe Machine -Drilling Using Dia 8mm For Pin Holes

4.	Cylinder plate	-Cutting -Filing -Drilling
5.	Displacer cylinder (heat sink)	-The cylindrical section cut from a pipe of internal diameter 54mm to a length of 100mm -The fins cut using a lathe machine from a thin plate of thickness 3mm -The end plates machine using a lathe machine from a plate of thickness 4.5mm, then drilled using an 8mm drill bit
6.	Displacer cylinder (heater)	The cylinder cut from a pipe of internal diameter of 54mm, then sealed off on one side by a plate of similar thickness by brazing -The end plate made from a 4.5mm thick plate
7.	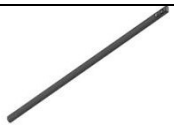 Displacer rod	Aluminium Rod of diameter 6mm machined from a lathe machine
8.	Displacer	Wooden block machined on a lathe machine to diameter 30mm and length 80mm
9.	Flywheel bush	Mild steel rod Machined on a lathe to 6mm diameter
10.	Flywheel	Cut from a 4.5mm thick plate to 150mm diameter
11.	Guide bush	Mild steel rod turned on both ends to 24 and 12mm and drilled through using 6mm drill bit
12.	Lever connecting rod	Cut off from a 3mm mild steel plate and drilled using a 6mm drill bit

13.	Levers 2 off	Cut off from a 3mm mild steel plate and drilled using a 6mm drill bit
14.	Links 2 off	Cut off from a 3mm mild steel plate and drilled using a 6mm drill bit
15.	Power cylinder	-Power cylinder machined from cast iron. -Bored to diameter 40mm(internal) and horned for smooth surface on the inside to allow piston to move freely without much friction -end plate made from 4.5mm thick plate and welded to the cast iron cylinder
16.	Base plate	Machined from a wooden base of 320 X 140 mm dimension
17.	Piston	Motor cycle piston of diameter 40mm acquired with oil rings

TABLE 3.2: OPERATION CHART

Assembly

The following are the parts in before and after assembly

1. Bearing plate:

The bearing plate was cut from a 3.5 mm mild steel plate. This was the strongest plate available for use as it would be rigid enough to support the fly wheel and crank web. An angle beam was arc welded to its bottom to make fitting to the base more easily via bolting.

2. The Cylinder heater:

The cylinder heater was made form a 52mm diameter pipe of length 100mm. The end of the pipe was sealed off by brazing a 3mm plate onto its end. The other ends, the flanges, were made from a 3.5mm plate that had been shaped from a 4.5mm plate and welded onto the pipe cutoff.

3. The cylinder heat sink:

The main body of the cylinder heat sink was also made from the 52 mm pipe cut to 100mm.

The cooling fins were cut from a 3mm thick sheet metal using a lathe and were brazed onto the pipe. The flanges were made from a 3.5mm mild steel plate and arc welded to each end. An 8mm drill was used to make holes for bolting.

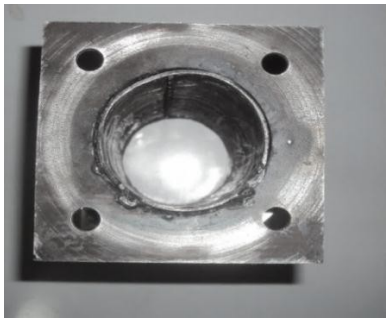

4. The cylinder plate

The cylinder plate was cut from a 3.5mm mild steel plate and drilled using 8mm bit for fastening holes. An angle beam was welded onto it for easier fastening onto the base.

5. The displacer guide bush

The guide bush was made by turning a one inch mild steel rod on a lathe machine to diameters 24 & 12 mm and to a length 62mm. its finishing was done using an emery cloth.

6. The dispalcer:

The displacer was made from a piece of light wood that was turned on a lathe machine do a diameter of 30mm and a length of 80mm. it would be then threaded to accommodate the displacer rod.

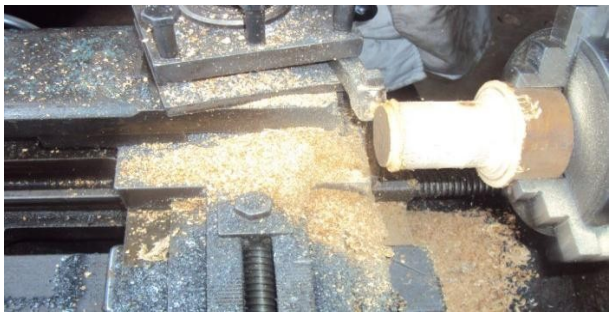

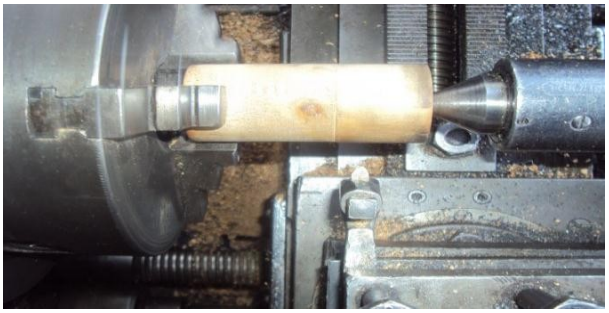

7. The power cylinder

The power cylinder was made purely of cast iron. This was a high precison part and couldn‟t be machined on the workshops lathe machines because of vibrations. Outsourcing this pieces was the best option. The initial dimensions of the sleeve were 20mm internal diameter and 180mm length. The sleeve was machines to 40mm internal diameter and horned on the inside to accommodate the power piston.

Before machining:

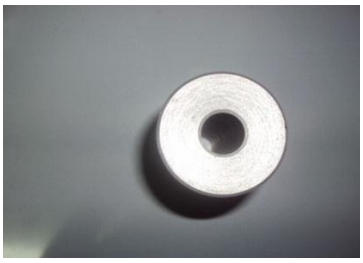

After machining;

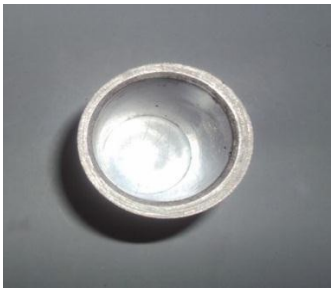

8. <u>The power piston:</u>

The power piston was a high precision part and therefore machining would be difficult. Buying a piston of a 50cc motorcycle piston complete with its oil rings seemed to be a better option. The piston was of 40mm diameter.

9. <u>The fly wheel assembly;</u>

The fly wheel was cut from a 4.5mm thick steel plate. To make fitting onto the bearing easier, the power pin was force fitted onto the fly wheel.

10. <u>The connecting rod;</u>

The connecting rod was machined from a one inch rod to a diameter of 6mm and a length of 150mm. The flat edge was machined on an end miller and a hole of diameter 6mm made on the face so as to accommodate the gudgeon pin.

11. <u>The engine base:</u>

The base of the engine was machined from a piece of 30mm thick board. The board was cut using the Shop Bot, a CNC cutting machine, because it was faster and more accurate. The engraving on the board was made using a CNC laser cutter.

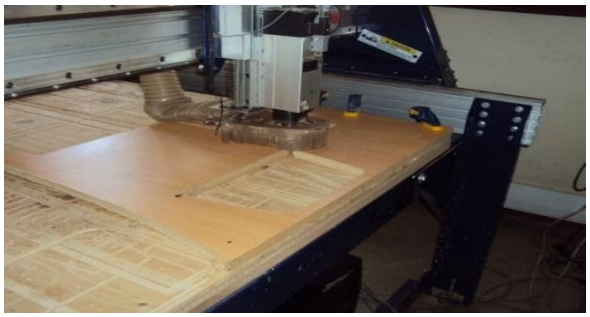

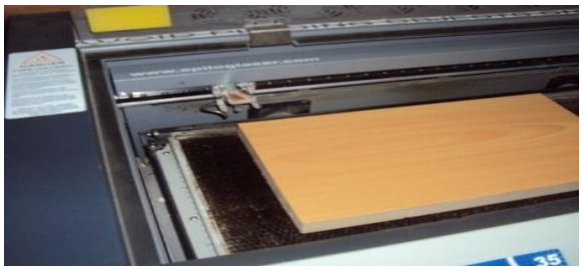

12. <u>The bearing plate assembly;</u>

The fly wheel, crank web and bearing plate were connected using an 12mm pin. On the fly wheel, a steel rod was machined to support its upright position on the bearing plate.

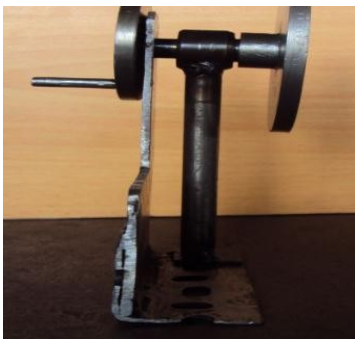

13. The complete engine assembly:

The cylinder heater, cylinder heat sink and power cylinder were fastened to the cylinder plate by M8 bolts. To seal off the joint, gaskets were cut and silicon applied onto the surfaces before the fasteners were tightly put.

The lever con rods and other small levers were rivetted onto each other and the bearing plate with ample clearance to facilitate movement between joints.

Finishing of most of these parts was done by using differnent grades of emery cloth.

To support the base, rubber stands were fitted onto the base.

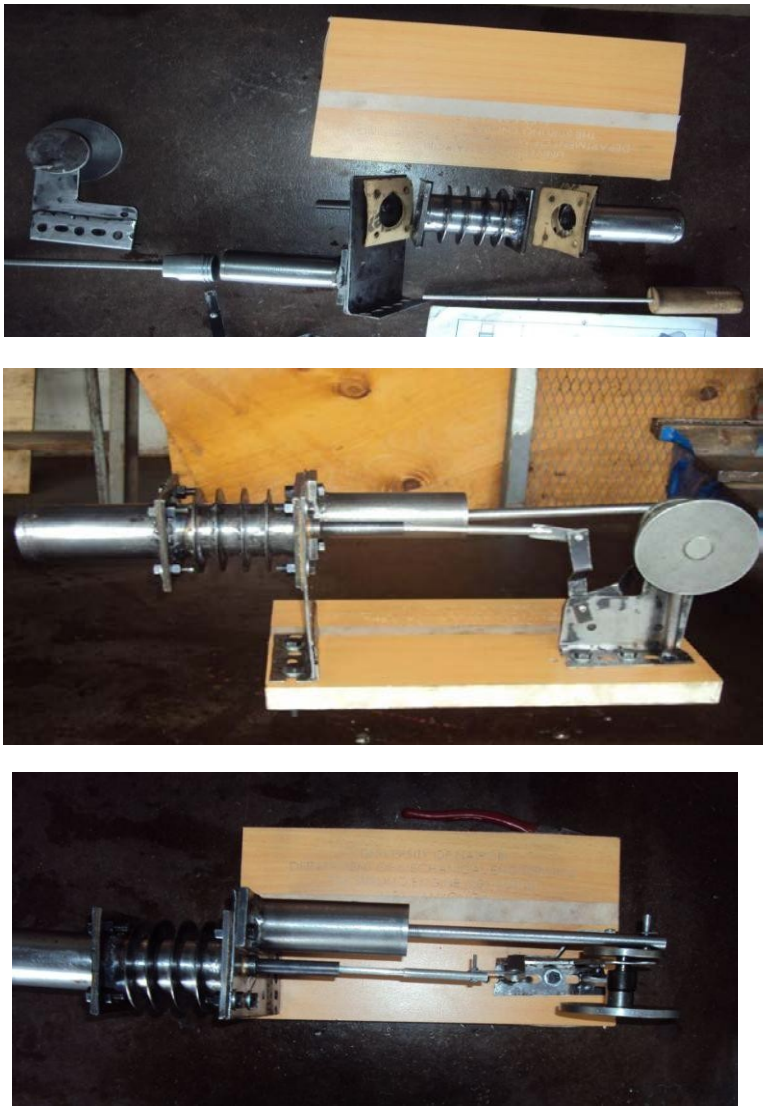

Figure 3.4: Showing The Parts Before And After Assembly

4. FINDINGS AND DISCUSSION

TESTS RESULTS

TEST 1

After the first test was conducted, by heating using oxyacetylene flame and cooling by ambient air, massive air leakages were discovered from the power cylinder assembly.

This was because piston rings had not been fitted on the piston during assembly. It is however noted that the piston rings omission was intentional to make the engine smooth running with as little friction as possible in the power cylinder.

TEST 2

Before the second test, the piston rings were fitted on the piston and adequate lubrication put in the power cylinder and other moving parts to reduce friction.

It was noted that after fitting the piston rings the engine became too stiff and therefore need to make it as free running as possible. To achieve this, the assembled engine was run on a lathe by clamping the flywheel to the lathe jaw and running at varying speeds.

In the second test, it was discovered that there was reduced air leak in the power cylinder. Further, due to increased pressure in the power cylinder, air leaks were discovered from the gaskets.

TEST 3

Before the third test, the engine was disassembled and new gaskets used between the flanges and fresh sealant (silicone) used to curb the new found leaks.

In the third test, the engine developed signs of kicking power, but due to more air loss during compression stroke in the power cylinder, the engine experienced power loss and could not run.

Upon scrutinizing the engine for the air loss, it was discovered that the engine was losing power due to small air leaks from the power cylinder due to irregularity in the cylinder profile. This irregularity in profile may have been attributed to any of the following stages in fabrication:

- During welding the cylinder to the flanges
- Imperfect machining when it was fabrication was outsourced
- In general assembly

The manufacture of the power cylinder was a precision procedure and therefore expensive. Constrained by monetary resources, fabrication was left there and a recommendation for further investment and development was made.

CALCULATIONS

Engine efficiency

The efficiency of the engine was calculated using the following formula:

$$Efficiency = \frac{Work\ output}{Energy\ input} \quad (4.1)$$

The power input to the system was estimated by taking the temperature difference between the heated part and the heat sink, as follows;

$$Energy\ input\ per\ second = Mass\ of\ air \times Air\ C_p \times \Delta T \quad (4.2)$$

However the mass of air can be calculated as;

$$Mass = Density(\rho) \times volume(v)$$

Therefore, taking $\rho = 1.2kg/m^3$

$$v = 1200 \times 10^{-6} m^3$$

$$Specific\ heat\ capacity, C_p = 1005\ J/kg\ K$$

$$Temperature\ change, \quad \Delta T \approx (600 - 50) = 550K$$

$$Energy\ input\ per\ second = 1.2 \times 1000 \times 10^{-6} \times 1005 \times 550$$

$$= 663\ \mathrm{J/s}$$

Taking the power output as that estimated by the Baele equation (eqn 2.11) as;

$$Power\ output = 45watts$$

Therefore, the efficiency can be calculated as;

$$Actual\ Efficiency = \frac{45}{663} \times 100 = 7.7\%$$

Thus the actual efficiency of the engine is 7.7%. This can be compared to the Ideal theoretical Stirling engine efficiency, which is theoretically equal to the Carnot efficiency as;

$$Ideal\ theoretical\ Efficiency = 1 - \frac{Tmin}{T_{max}} \quad (4.3)$$

$$= (1 - \frac{50 + 273.15}{600 + 273.15}) \times 100 = 63\%$$

DISCUSSION

The project was carried out with an objective to explore the possibility of tapping power for subsistence use from a Stirling engine. This was done with the view of aiding the government find alternative sources of energy to for the rural electrification.

To achieve this, a solar powered Hybrid Stirling engine was envisaged as a possible route to explore alternative energy. The hybrid concept was chosen to take advantage locally available biomass source of energy as well as the hot and sunny weather experienced in some of the marginalized parts of Kenya.

With this vision, sketches were made that led to computer aided designs that gave a graphical representation of what was anticipated during and after fabrication.

After designs approval and acquisition for funds and materials, fabrication was carried out in a span of about 8 weeks and a prototype came to being.

Tests were carried out with a view of estimating actual efficiency and calculating power output from the engine. The engine was put through a series of tests that were not conclusive due to air loss. The intension to measure the power output was therefore not feasible. The theoretical efficiency was then used to estimate the net power output using the Baele equation (eqn 2.11) as 45 watts. With this power estimate, the engine efficiency was calculated as 7.7%. This efficiency, compared to the theoretical Stirling engine efficiency of 63%, was found to be more reasonable and practical.

Some of the losses of power, as reflected from the efficiency, were attributed to friction in the engine. In spite of the thorough lubrication that was done, friction was inevitable. From the assessment carried out, the greatest source of friction was in the flywheel assembly. This was because the flywheel assembly constituted several mating pieces, which rubbed on each other during operation. In addition, there was a lot of friction in contact between the piston and power cylinder arrangement.

Further, the engine experienced power loss due to out-of-balance masses in the assembly. It is noted that the attachment of the crank shaft to the flywheel introduced an out of balance mass that contributed to the power loss. To rectify this, a re-examination of the parts in the assembly was recommend, in addition to a kinematic assessment of the engine to ensure all parts were balanced.

In carrying out the project, many challenges were encountered. Top on the list of these was lack of funds to actualize desired results. This was a major problem that saw us not have enough money to get a new power cylinder to further test the engine. It is noted that we had to supplement the allocated Ksh. 5000, with an extra Ksh. 8500 to fabricate the prototype (see bill of quantities- appendix B). Most of the money consuming parts were the high precision ones that required outsourcing services in town.

Another challenge was lack of materials from the Mechanical Engineering workshop store. This further aggravated the lean working budget. Lastly, time constrain was another factor of challenge. This saw us spend long hours in the workshop, and even more time in Nairobi‟s Kirinyaga Road, with the burning ambition to actualize the project idea. In spite of all these challenges, we were able to fabricate a prototype that pointed us to the right direction and took the project a step closer to actualization.

CONCLUSION

The project was undertaken to explore the practicality of power production from a Hybrid Stirling engine. This included research, design and fabrication.

The fabricated model was then tested and it was noted that some air leaks existed in the power cylinder. The power cylinder was an expensive part, and constrained by monetary resources, discussions and recommendations were made and the project was wrapped up.

On the overall, the project was successful on several accounts. First, a successful research led to a design that was simulated on Autodesk Inventor, and showed kinematic synchronization. In addition, the prototype was fabricated and pointed the project exploration in the right direction. The setbacks encountered were used to give recommendations and pointed out some ways of project improvement. A theoretical energy assessment showed that with an open flame of sufficient temperature, (about $600^{o}C$) the designed Stirling engine would generate 45watts of power.

In conclusion therefore, the project successfully explored the practicality of generating power from a Hybrid Stirling engine.

RECOMMENDATIONS

a) More project funding

Most precision parts demanded large resource allocation. This was because we had to outsource machining services from specialists in town

b) Further research and exploration

Further research and exploration of this technology will realize its full potential. We therefore recommend that students to be encouraged to take this project for research.

c) Government partnership with academia

In order to realize the vision 2030, the government should work closely with academia to look into ways of creating jobs and expand economic space using technology. With regard to the Stirling engine, the government should provide standards and guidelines for further research development of this exciting technology.

d) Fabrication of the solar concentrator:

We recommend that a solar concentrator be fabricated from a piece of card board that can be folded to form a parabola then lined with an aluminium reflective sheet & supported by a wooden block base. This would aid in harvesting solar energy.

e) Design & Fabrication Improvements

Having fabricated the Gamma configuration Stirling Engine, we noted a few areas that needed improvement:

i. The oil in the power cylinder seemed to dry off at a faster rate than we could anticipate. We realized that this was due to a design flaw in that we hadn‟t included a means on oiling the chamber when necessary. It was therefore noted that an oil nipple should be introduced on the power cylinder so as to make lubrication of the chamber easier when needed.
ii. There was a lot of “out of balance” movement from the fly wheel which might have caused a lot of vibrations if the engine were running. It is therefore necessary to carry out a kinematic assessment to be able to do a mass balance on the flywheel.
iii. To tap generated power from the engine we propose the attachment of a dynamo to the flywheel and a battery to store the energy realized.

REFERENCES

1. B. Kongtragool, S. W. (2003). A review of solar-powered Stirling engines . *Renewable and Sustainable Energy Reviews 7*, 131–154.
2. Boles, Y. A. (n.d.). Thermodynamics: An Engineering Approach, 5th edition. In Y. A. Boles.
3. Husk Power Systems. (n.d.). Retrieved February 2012, from http://www.huskpowersystems.com
4. *Konax Stirling Engines*. (n.d.). Retrieved january 2012, from Konax Stirling Engines: http://www.kontax.co.uk/docs/history.pdf
5. Leinhard IV, J. H. (2004). *A heat Transfer Text book 3rd Edition.* Phlogiston Press.
6. McCONKEY, T. E. (2009). Applied Thermodynamics. In T. E. McCONKEY, *Applied Thermodynamics for engineering technologists* (pp. Chapter 5: Heat Engine Cycle, 163-165).
7. Ministry of State for Planning, N. D. (n.d.). *Vision 2030*. Retrieved January 2012, from Vision 2030: http://www.vision2030online.go.ke/
8. Rajput, R. K. (2006). *HEAT AND MASS TRANSFER.* S.CHAND.
9. Schmidt, T. (1949.). *Heat transfer calculations for extended surfaces. Refrigerating Engineering*
10. *Stirling Engines*. (n.d.). Retrieved January 2012, from Wikipedia: http://en.wikipedia.org/wiki/Stirling_engine

APPENDIX A: STIRLING ENGINE DESIGN MANUAL

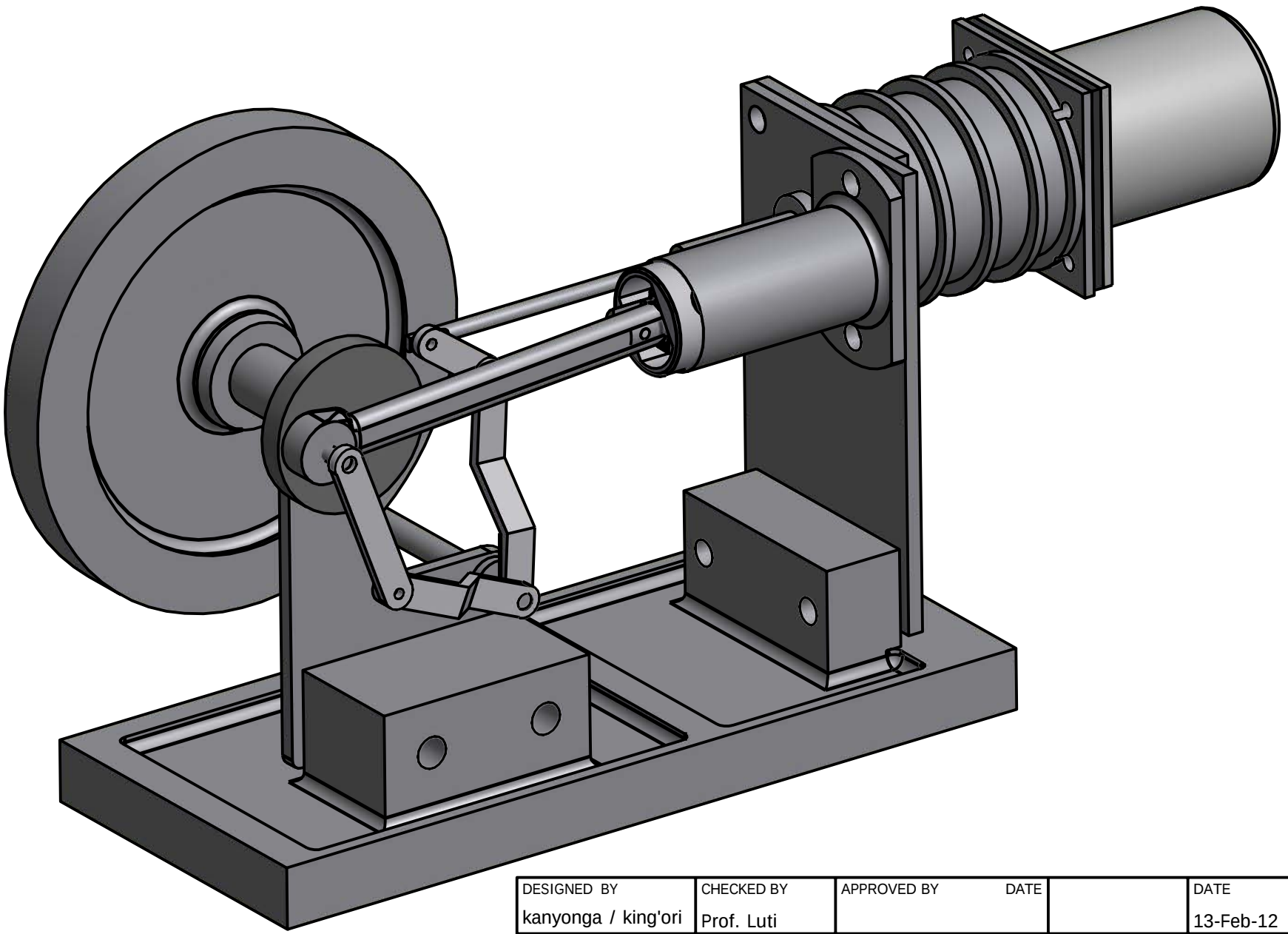

DESIGNED BY	CHECKED BY	APPROVED BY	DATE		DATE	
kanyonga / king'ori	Prof. Luti				13-Feb-12	

The Stirling Engine

Assembly	ISSUE	SHEET
		1 / 24

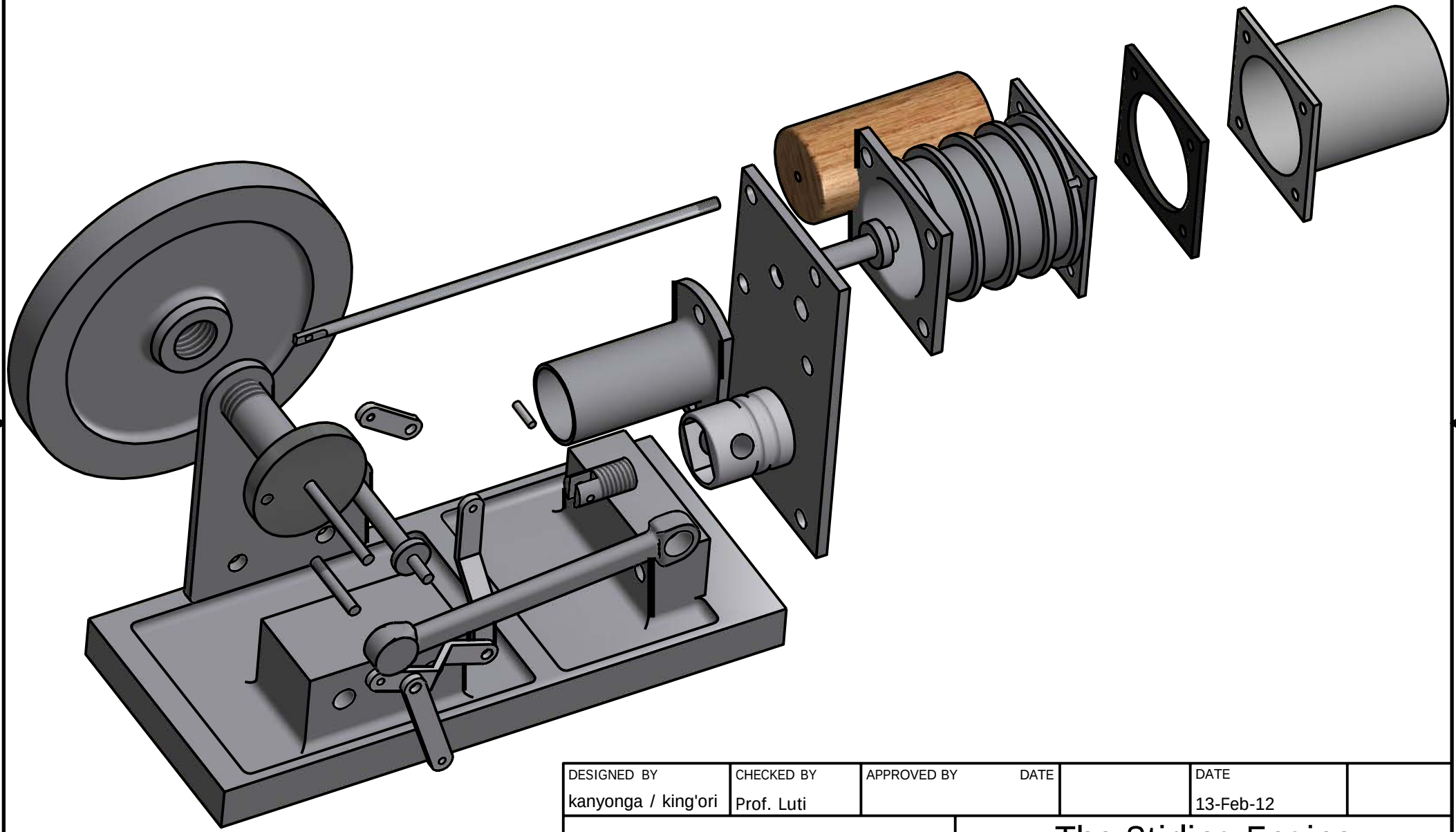

DESIGNED BY	CHECKED BY	APPROVED BY	DATE		DATE	
kanyonga / king'ori	Prof. Luti				13-Feb-12	

The Stirling Engine

Explosion view	ISSUE	SHEET
		2 / 24

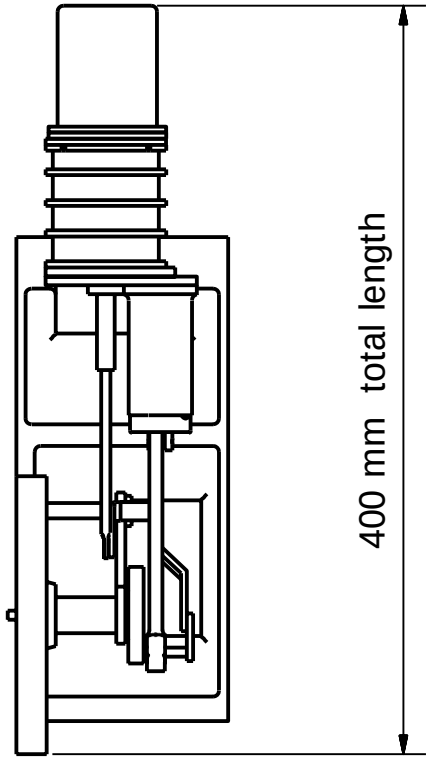

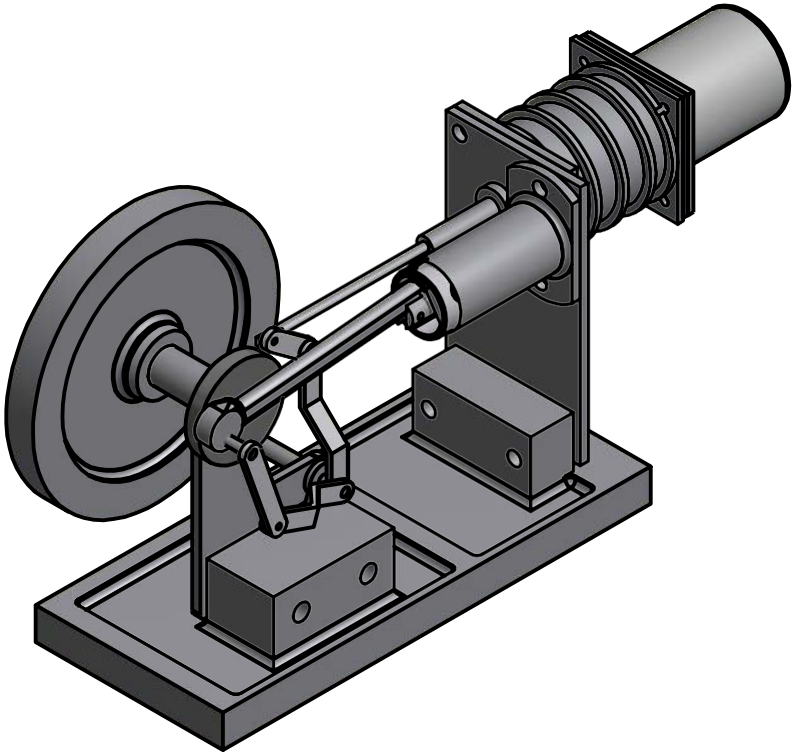

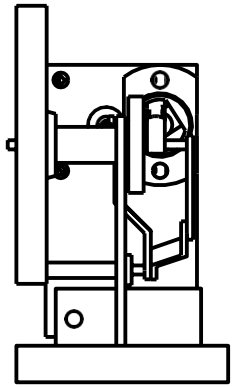

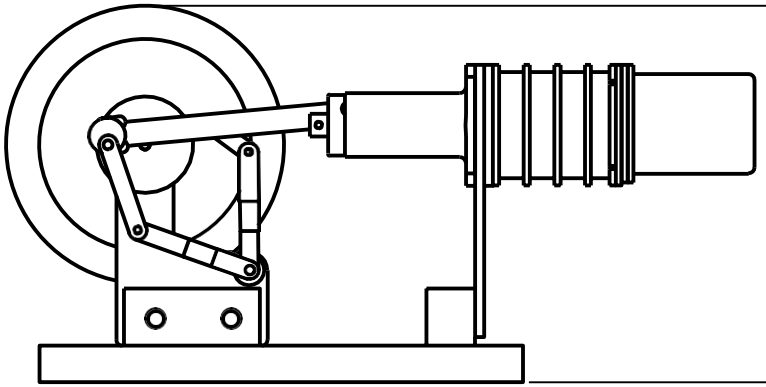

140 mm total width

DESIGNED BY	CHECKED BY	APPROVED BY	DATE		DATE	
kanyonga / king'ori	Prof. Luti				13-Feb-12	

The Stirling Engine

Assembly views	ISSUE	SHEET
		3 / 24

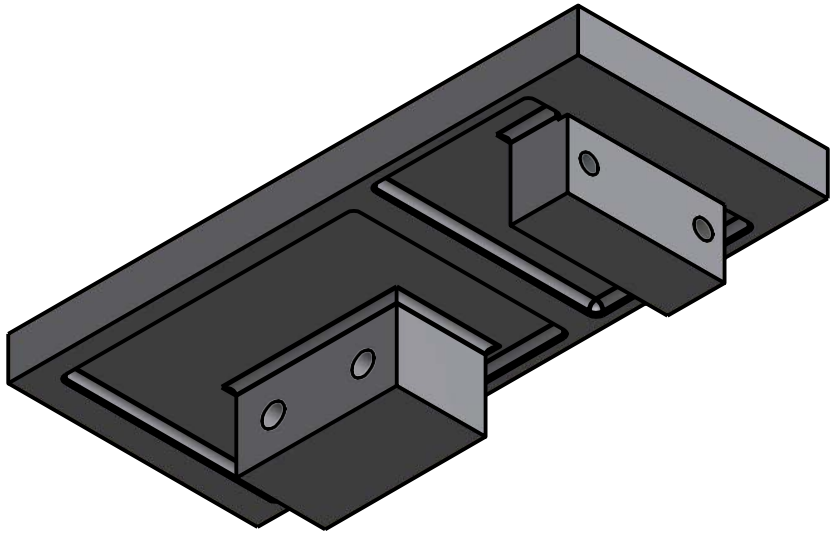

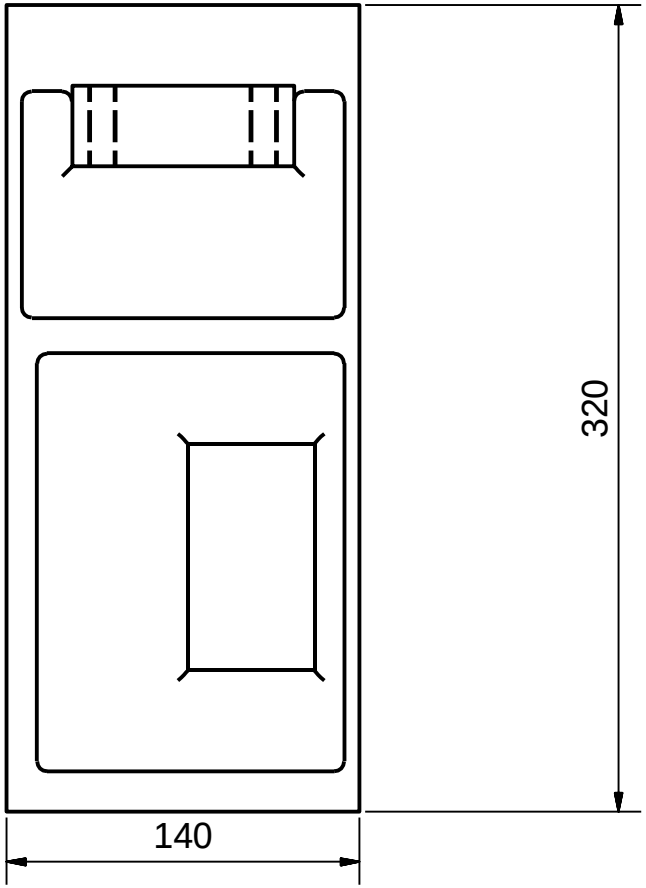

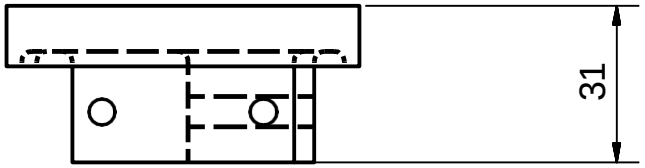

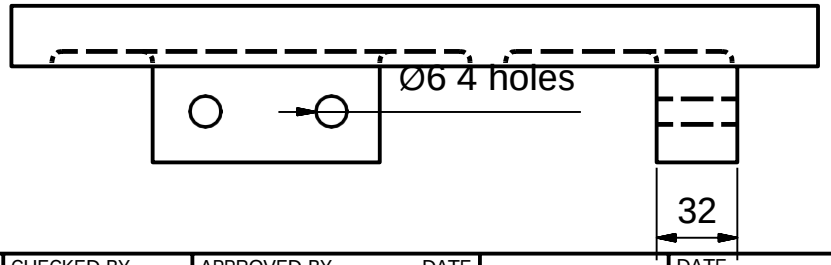

DESIGNED BY	CHECKED BY	APPROVED BY	DATE		DATE	
kanyonga / king'ori	Prof. Luti				13-Feb-12	

The Stirling Engine

	ISSUE	SHEET
Base		4 / 24

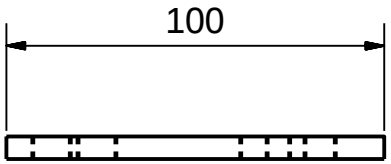

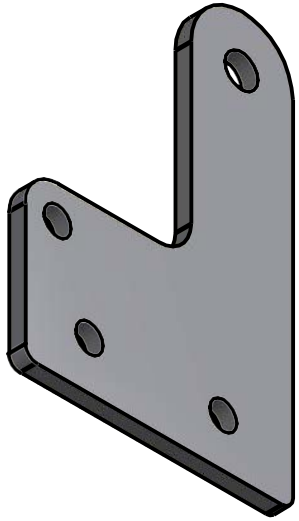

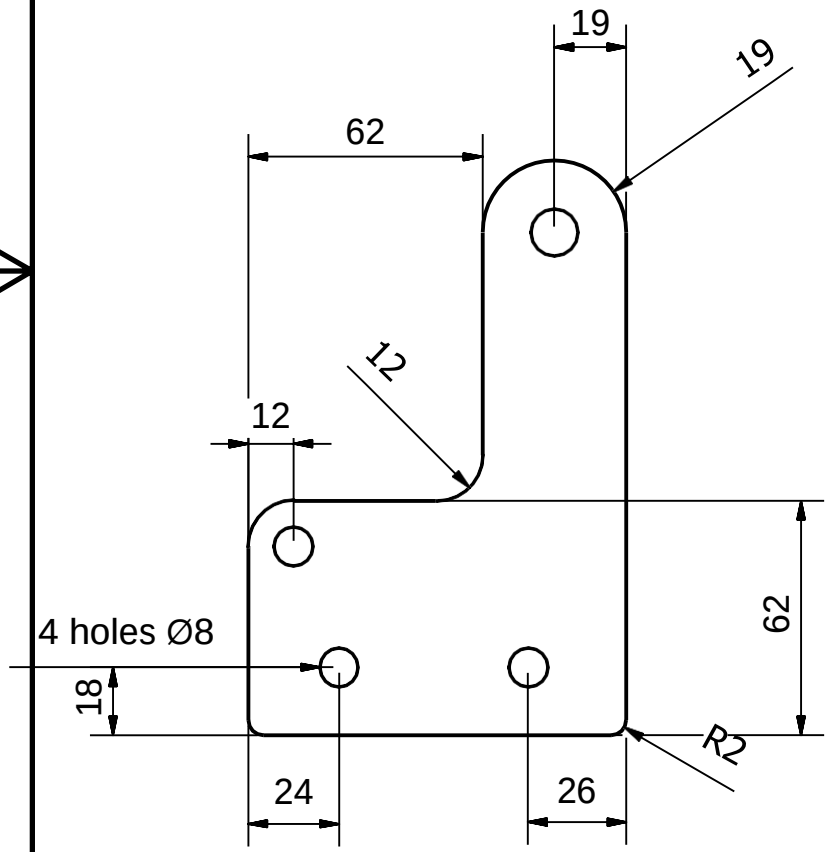

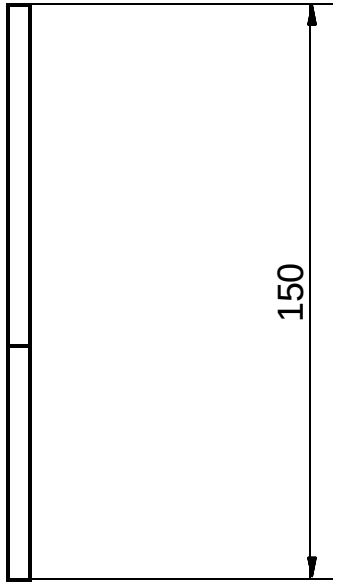

DESIGNED BY	CHECKED BY	APPROVED BY	DATE		DATE	
kanyonga / king'ori	Prof. Luti				13-Feb-12	

The Stirling Engine

Bearing Plate

ISSUE

SHEET 5 / 24

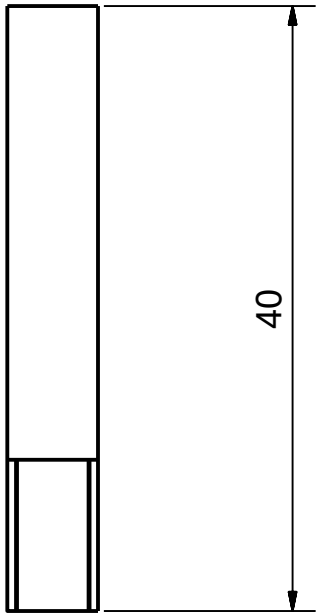

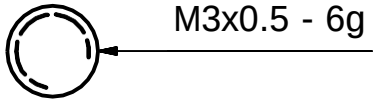

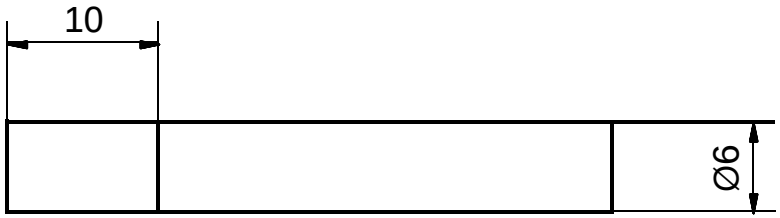

DESIGNED BY	CHECKED BY	APPROVED BY	DATE		DATE	
kanyonga / king'ori	Prof. Luti				13-Feb-12	

The Stirling Engine

crank pin

ISSUE

SHEET 6 / 24

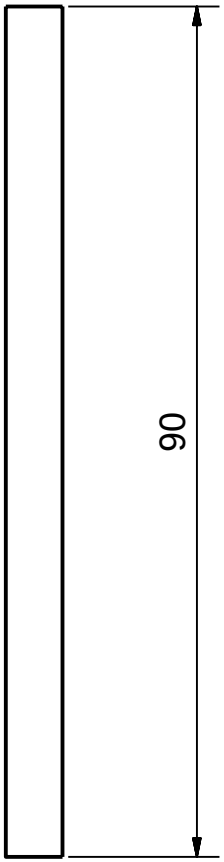

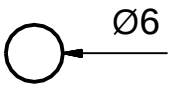

DESIGNED BY	CHECKED BY	APPROVED BY	DATE		DATE	
kanyonga / king'ori	Prof. Luti				13-Feb-12	

The Stirling Engine

crank shaft

ISSUE

SHEET 7 / 24

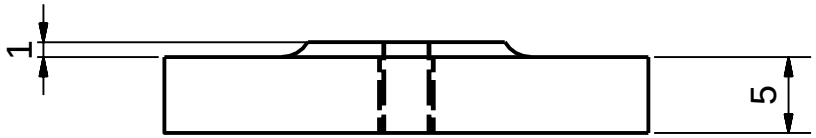

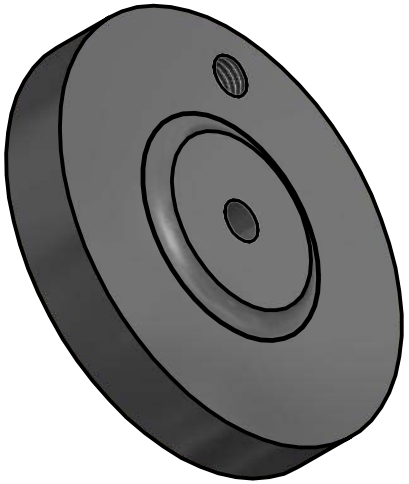

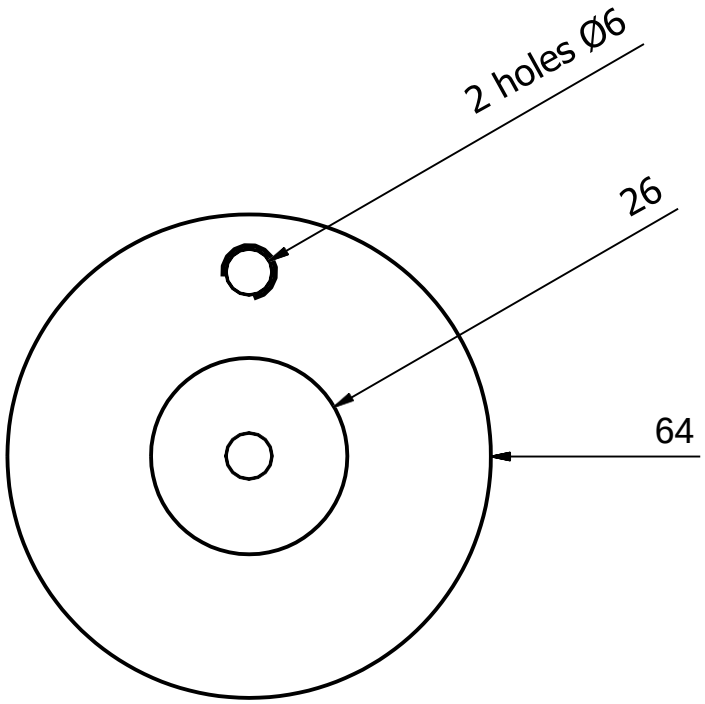

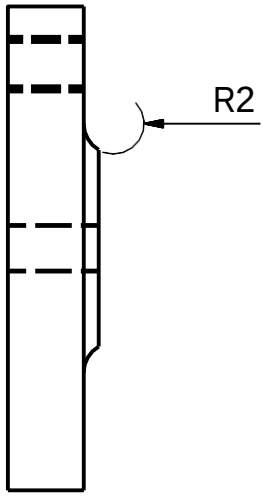

DESIGNED BY	CHECKED BY	APPROVED BY	DATE		DATE	
kanyonga / king'ori	Prof. Luti				13-Feb-12	

The Stirling Engine

crank web

ISSUE

SHEET 8 / 24

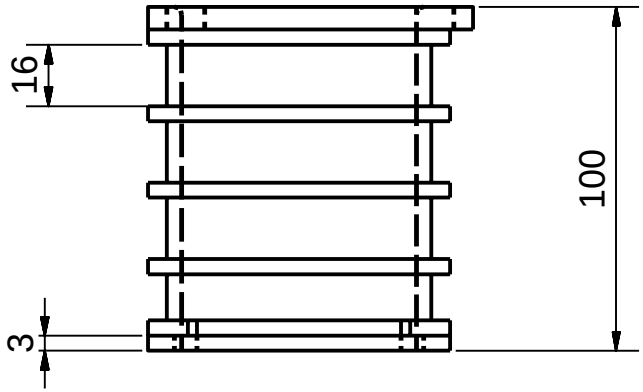

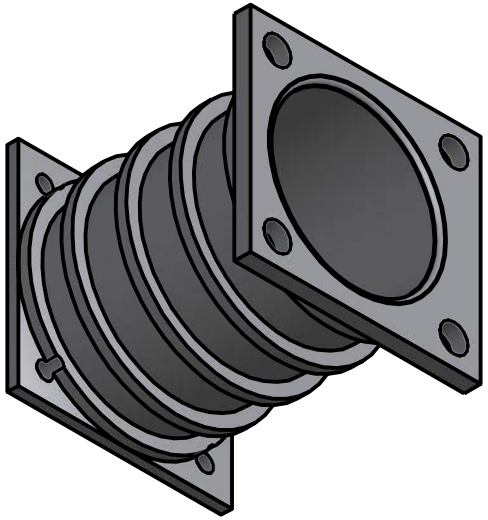

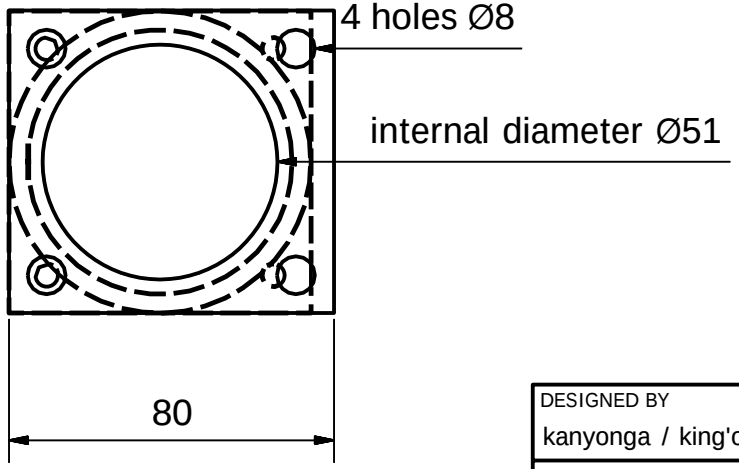

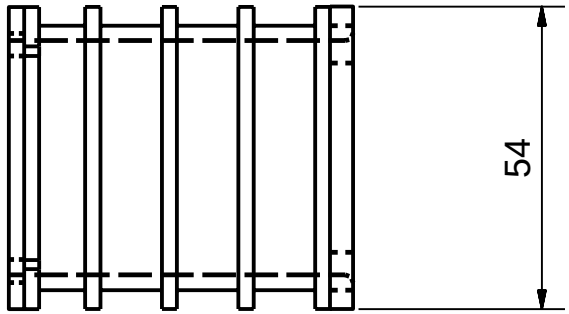

DESIGNED BY	CHECKED BY	APPROVED BY	DATE		DATE	
kanyonga / king'ori	Prof. Luti				13-Feb-12	

The Stirling Engine

cylinder heat sink	ISSUE	SHEET
		9 / 24

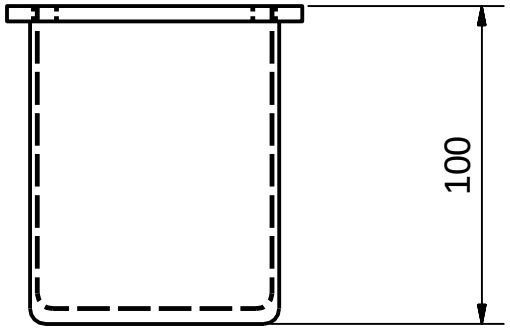

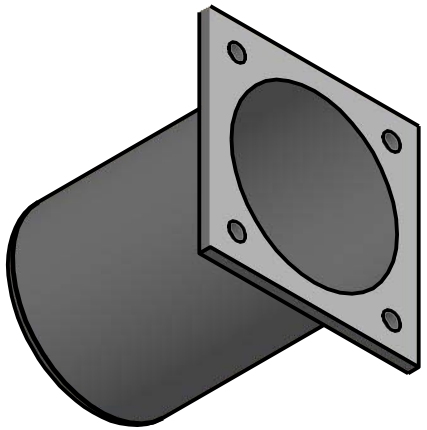

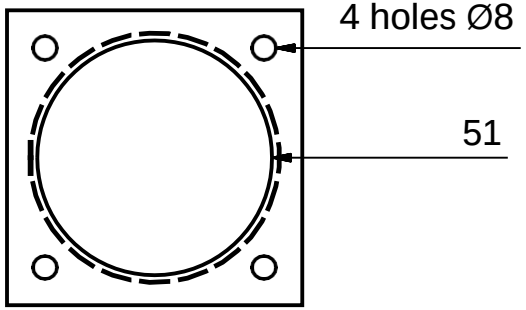

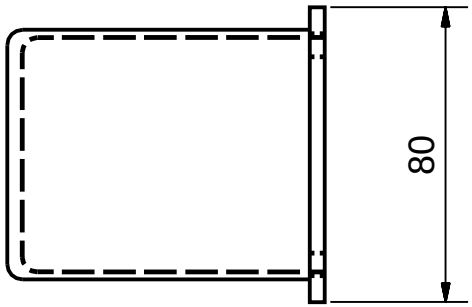

DESIGNED BY	CHECKED BY	APPROVED BY	DATE		DATE	
kanyonga / king'ori	Prof. Luti				13-Feb-12	

The Stirling Engine

cylinder heater	ISSUE	SHEET
		10 / 24

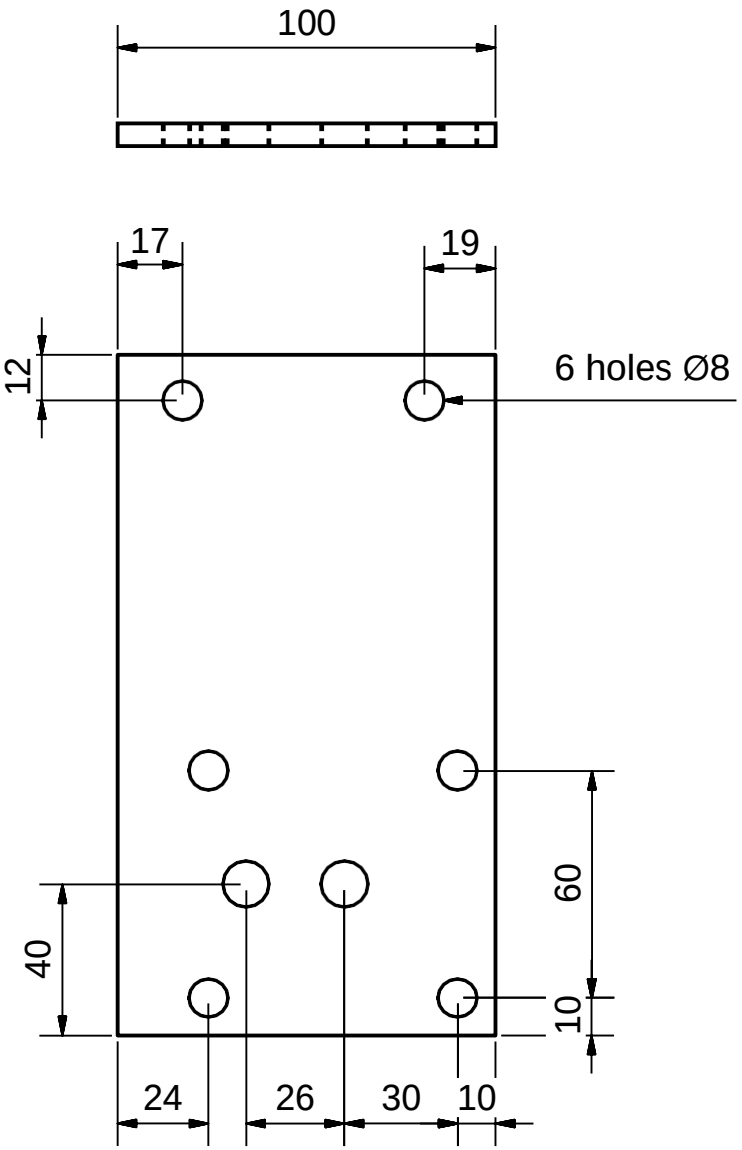

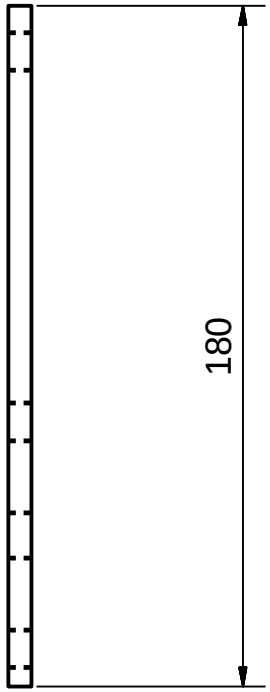

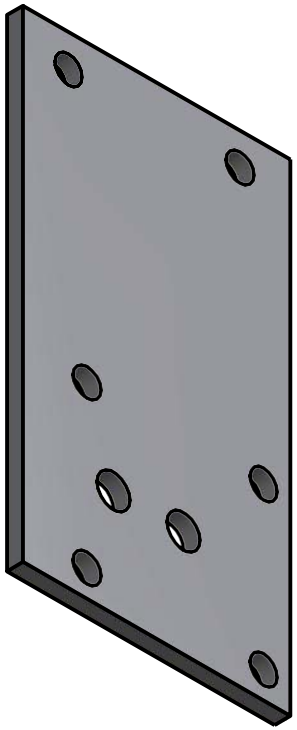

DESIGNED BY	CHECKED BY	APPROVED BY	DATE		DATE	
kanyonga / king'ori	Prof. Luti				13-Feb-12	

The Stirling Engine

cylinder plate	ISSUE	SHEET
		11 / 24

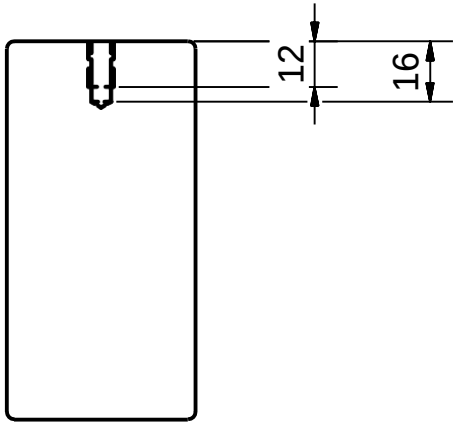

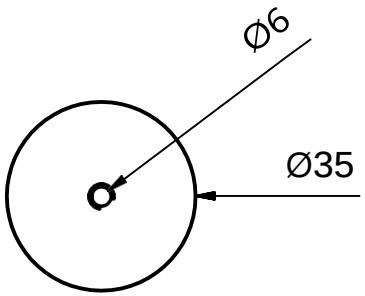

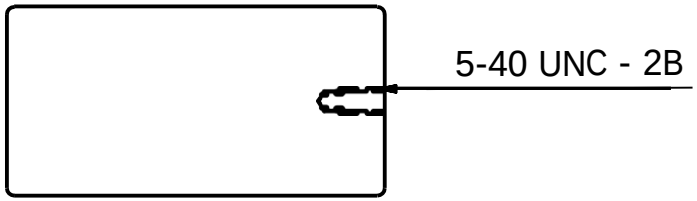

DESIGNED BY	CHECKED BY	APPROVED BY	DATE		DATE	
kanyonga / king'ori	Prof. Luti				13-Feb-12	

The Stirling Engine

Displacer	ISSUE	SHEET
		12 / 24

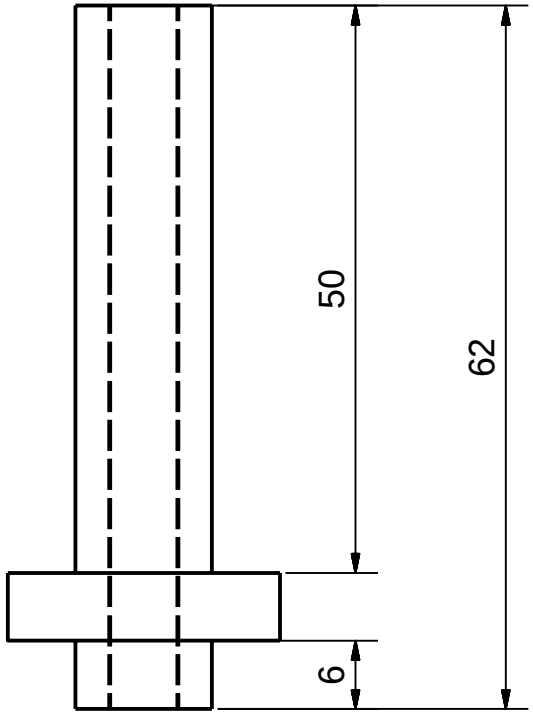

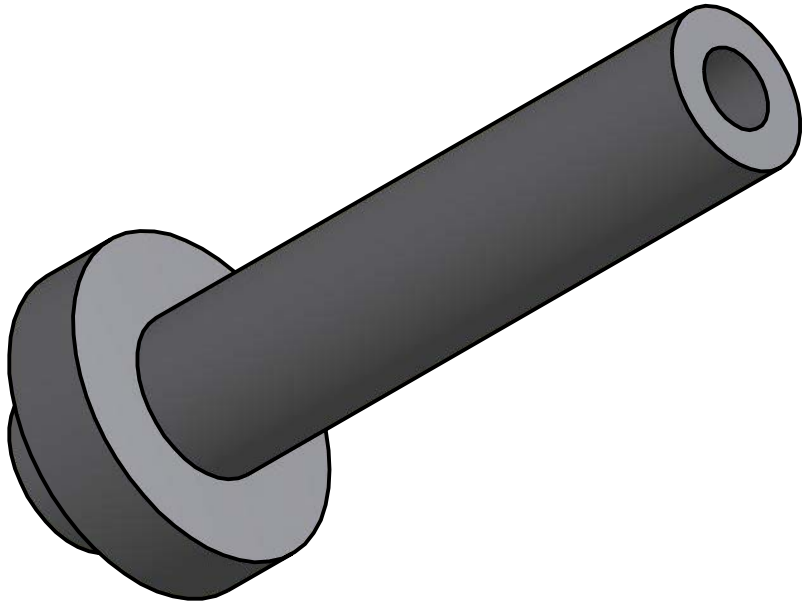

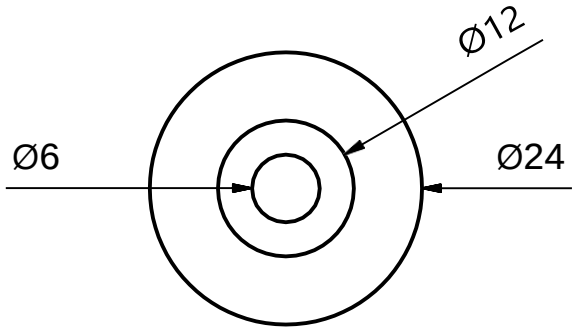

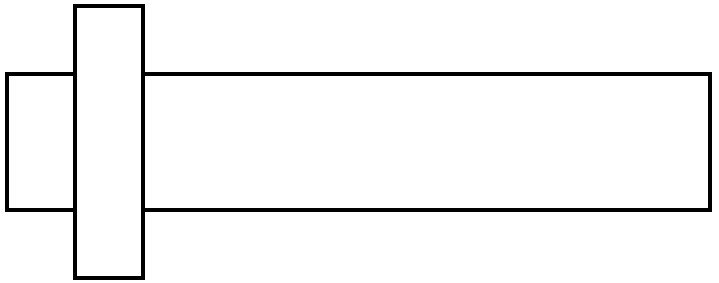

DESIGNED BY	CHECKED BY	APPROVED BY	DATE		DATE	
kanyonga / king'ori	Prof. Luti				13-Feb-12	

The Stirling Engine

Displacer guide bush

ISSUE

SHEET 13 / 24

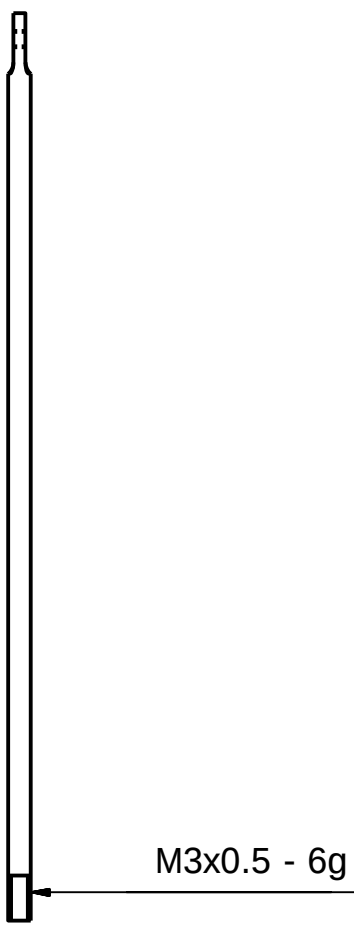

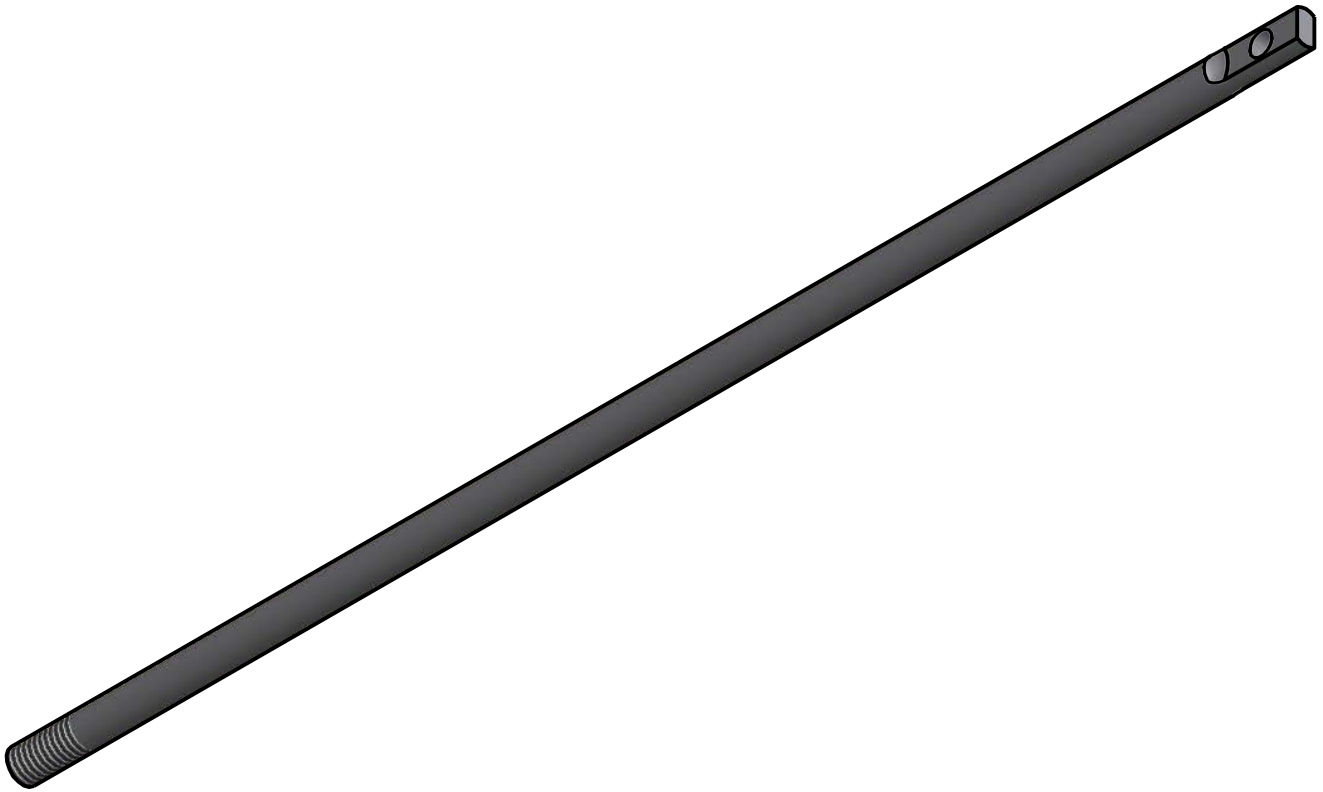

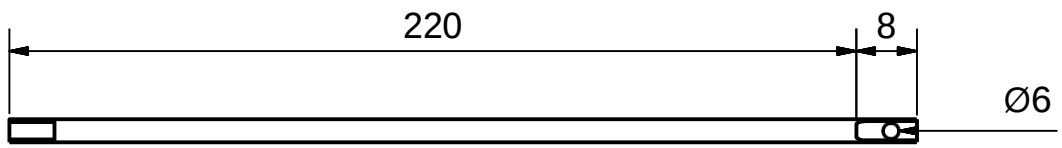

DESIGNED BY	CHECKED BY	APPROVED BY	DATE		DATE	
kanyonga / king'ori	Prof. Luti				13-Feb-12	

The Stirling Engine

Displacer rod

ISSUE	SHEET
	14 / 24

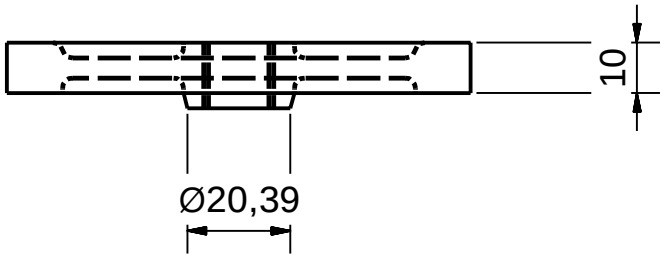

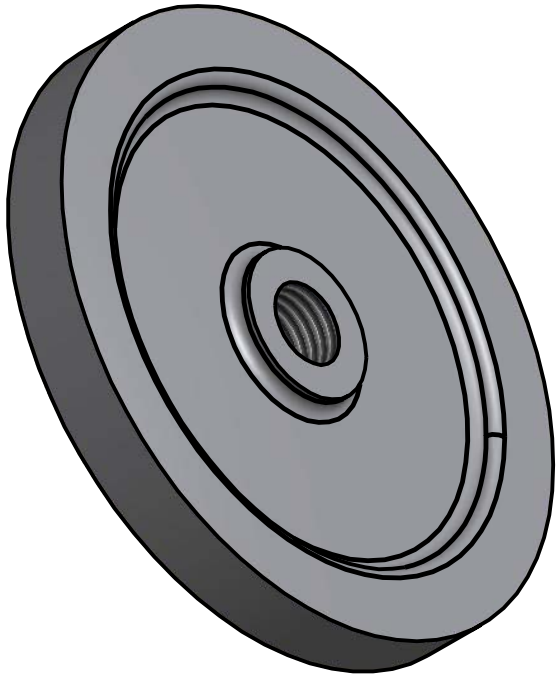

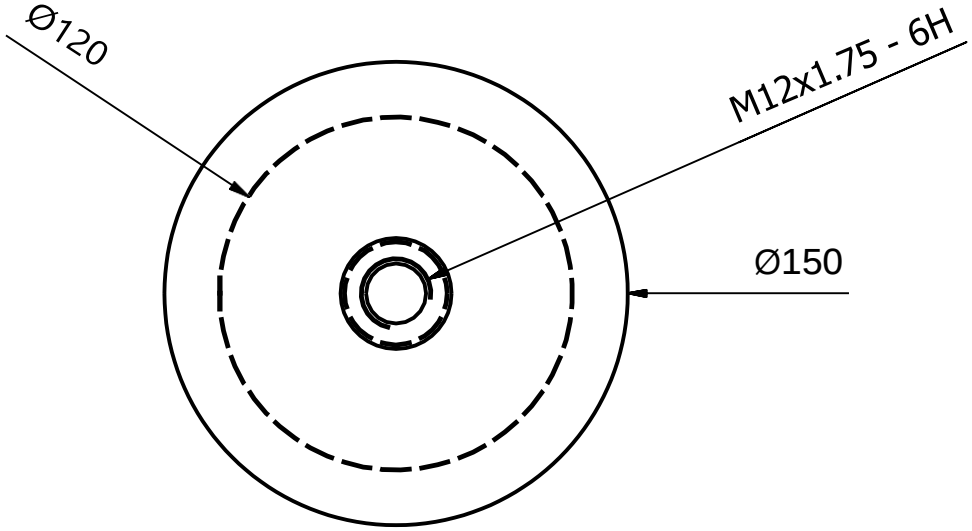

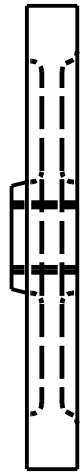

DESIGNED BY	CHECKED BY	APPROVED BY	DATE		DATE	
kanyonga / king'ori	Prof. Luti				13-Feb-12	

The Stirling Engine

flywheel		ISSUE	SHEET 15 / 24

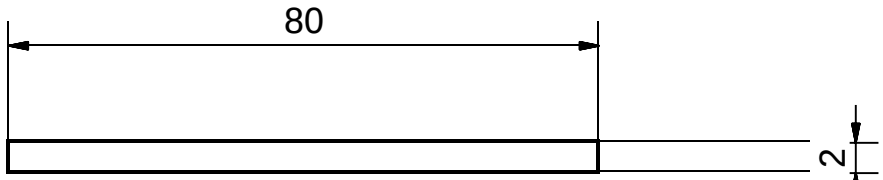

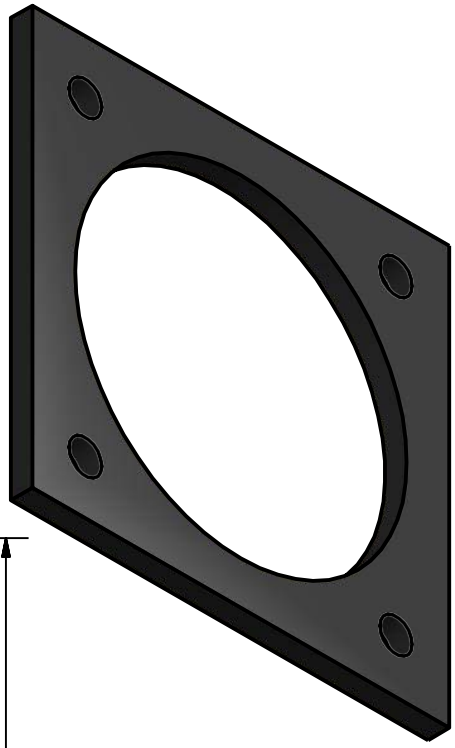

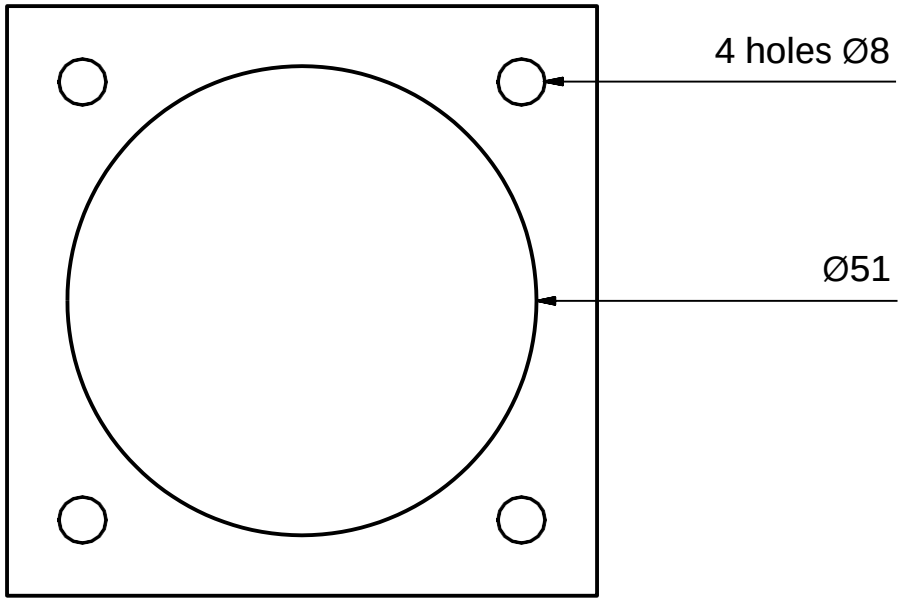

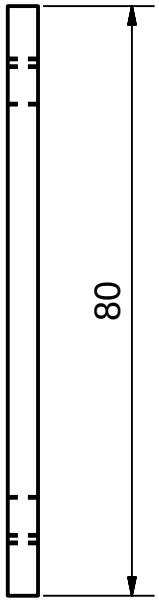

DESIGNED BY	CHECKED BY	APPROVED BY	DATE		DATE	
kanyonga / king'ori	Prof. Luti				13-Feb-12	

The Stirling Engine

gasket insulation	ISSUE	SHEET
		16 / 24

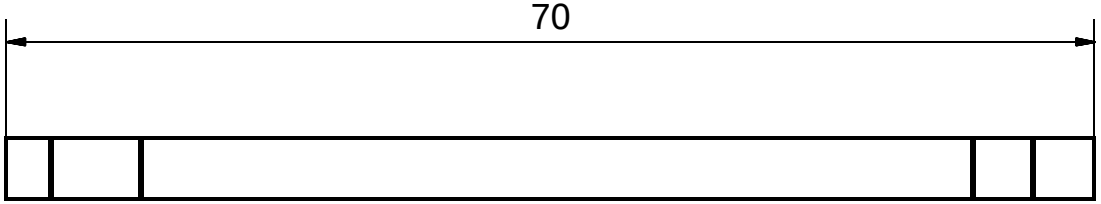

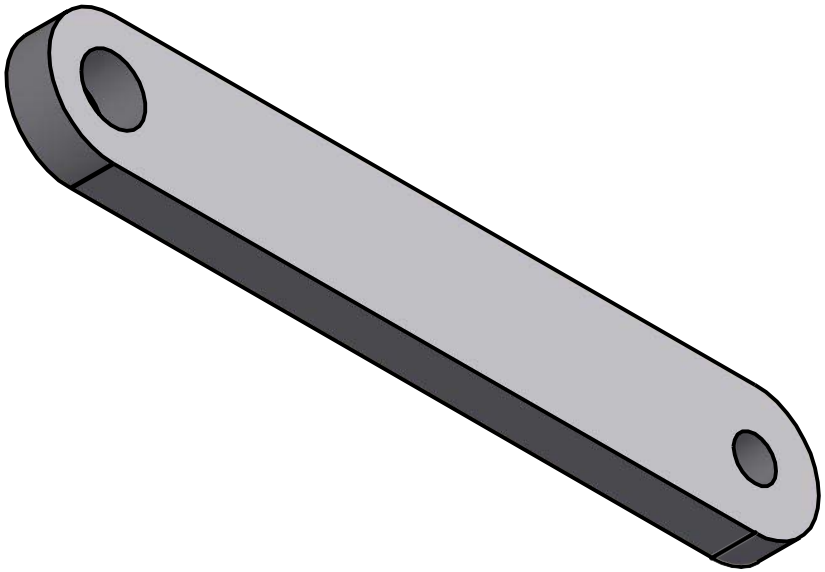

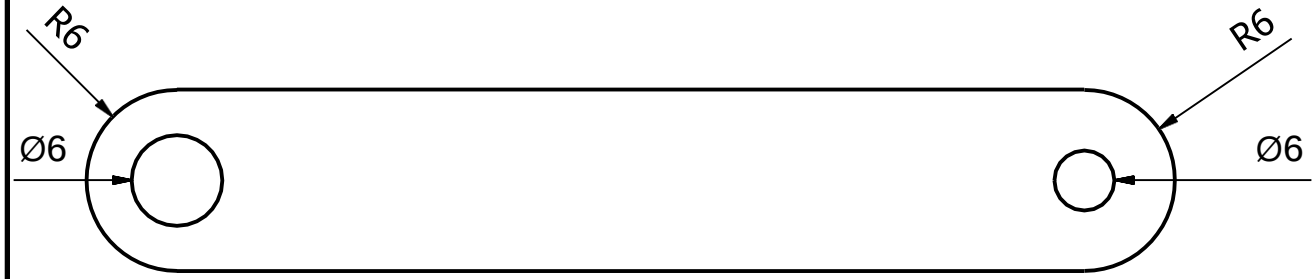

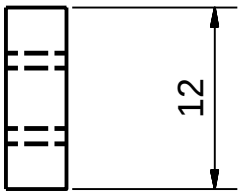

DESIGNED BY	CHECKED BY	APPROVED BY	DATE		DATE	
kanyonga / king'ori	Prof. Luti				13-Feb-12	

The Stirling Engine

lever connecting rod	ISSUE	SHEET
		17 / 24

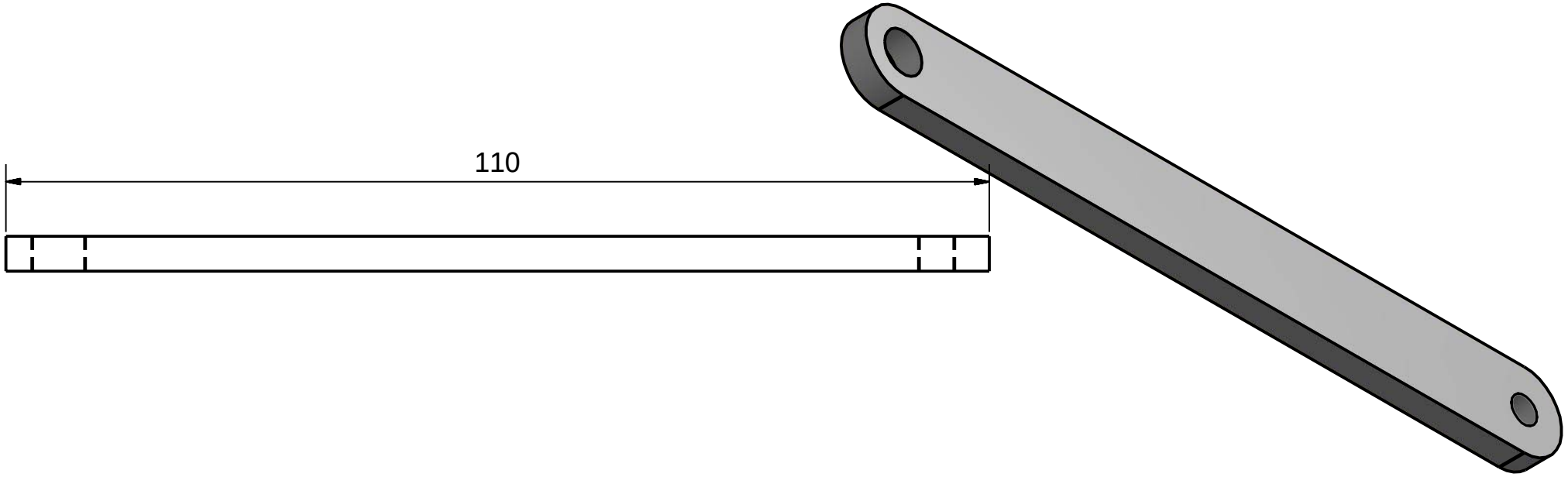

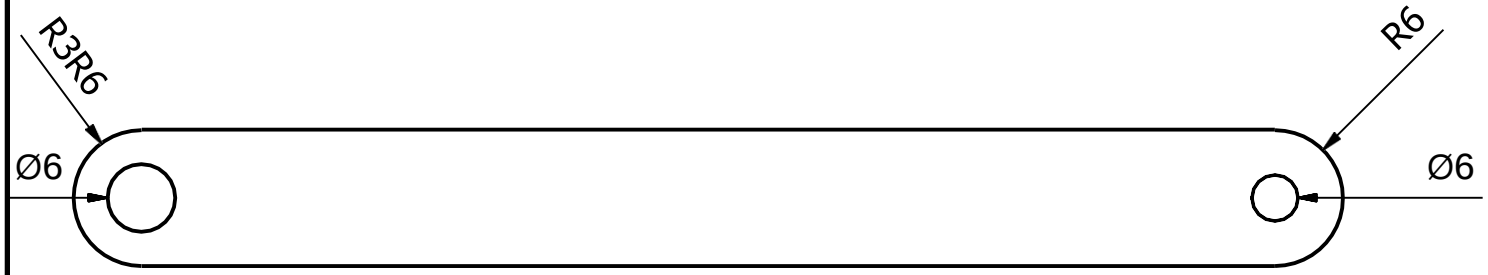

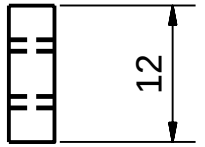

DESIGNED BY	CHECKED BY	APPROVED BY	DATE		DATE	
kanyonga / king'ori	Prof. Luti				13-Feb-12	

The Stirling Engine

lever

ISSUE

SHEET 18 / 24

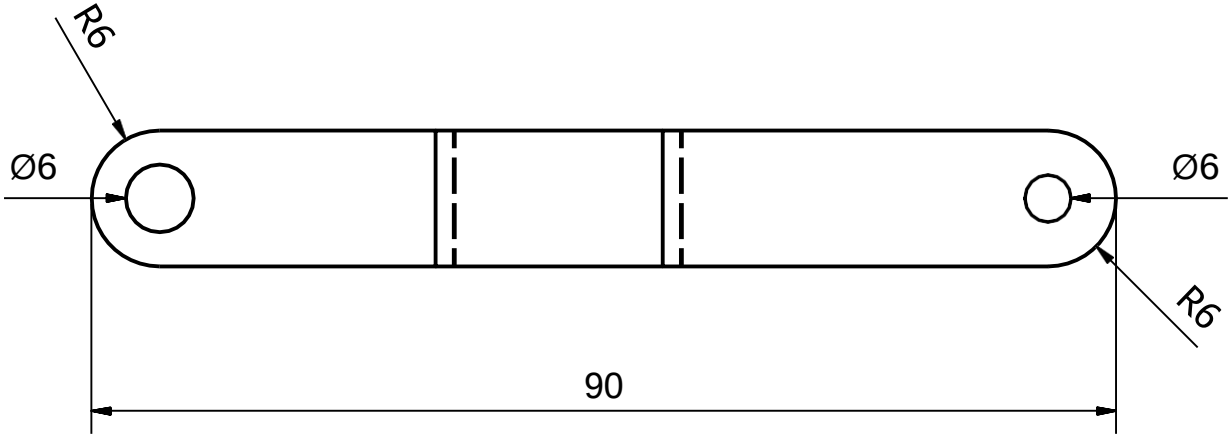

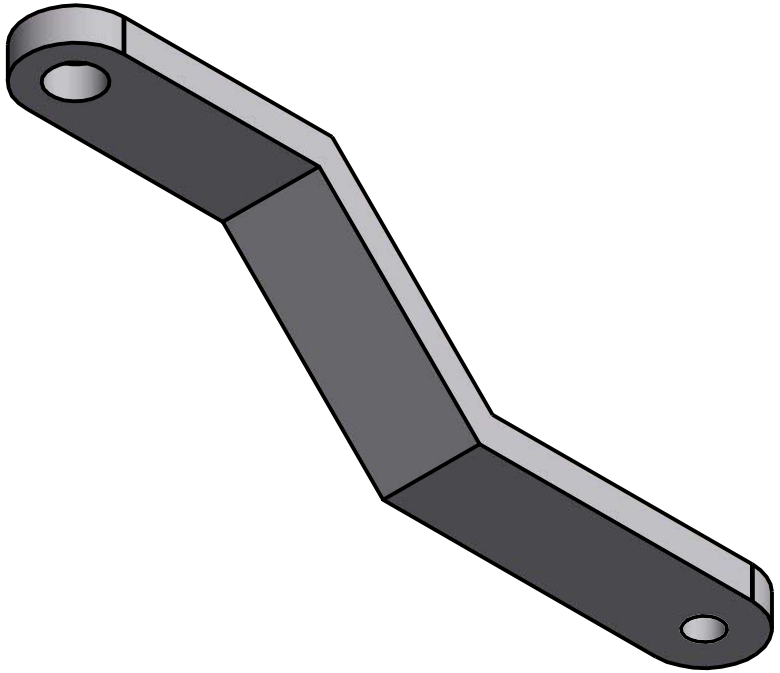

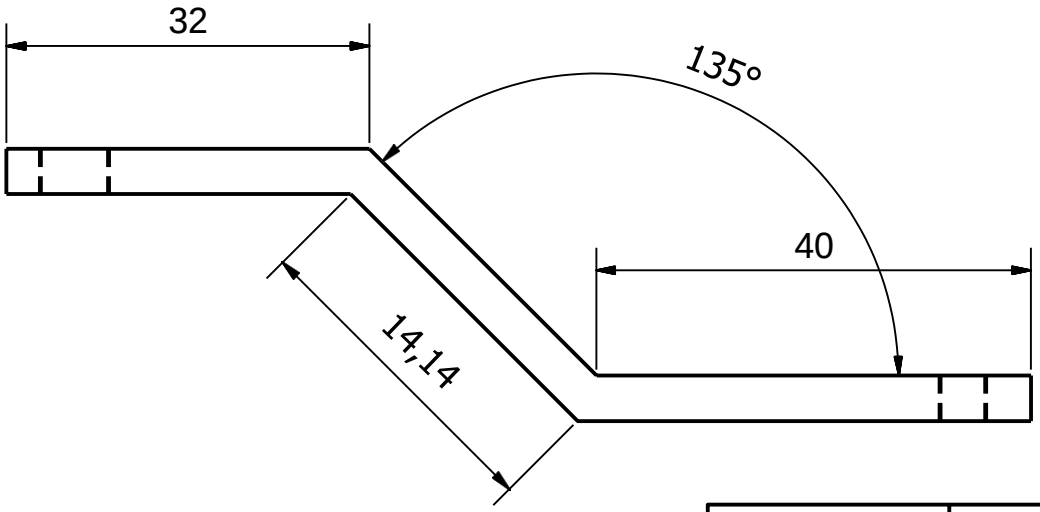

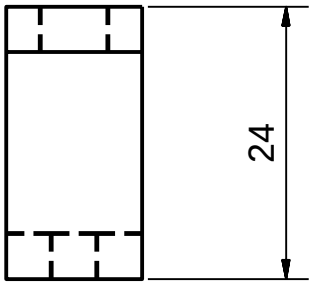

DESIGNED BY	CHECKED BY	APPROVED BY	DATE		DATE	
kanyonga / king'ori	Prof. Luti				13-Feb-12	

The Stirling Engine

lever 2 off

ISSUE

SHEET 19 / 24

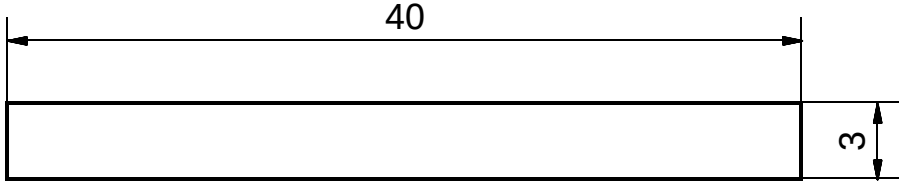

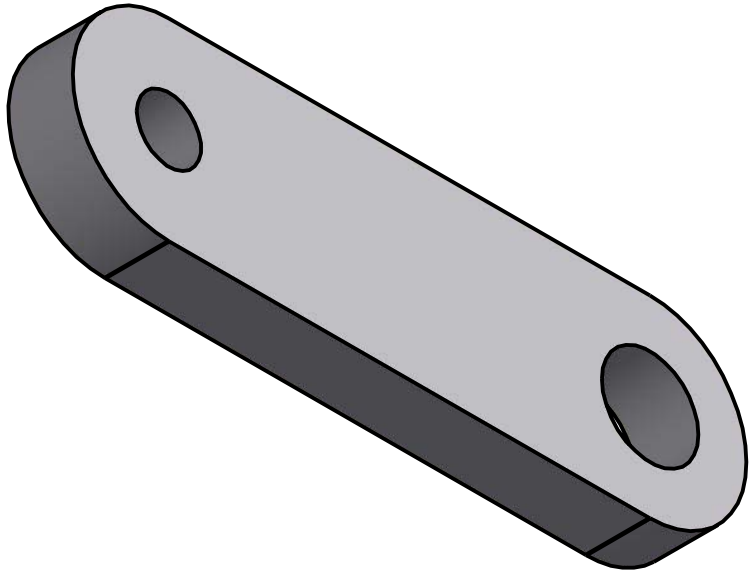

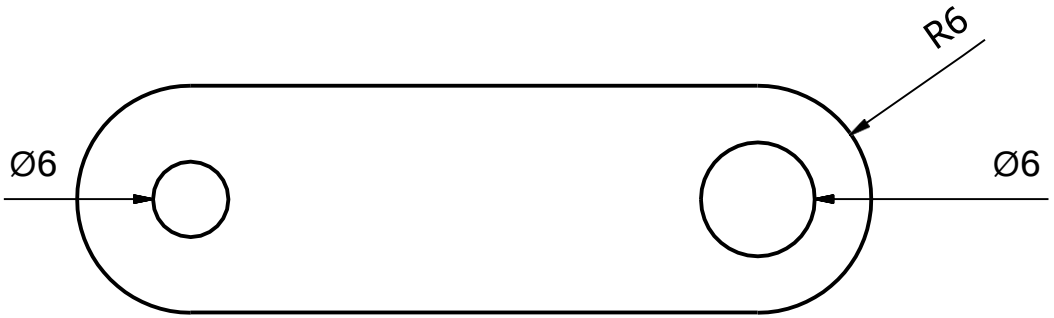

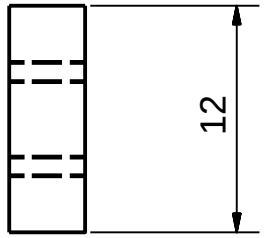

DESIGNED BY	CHECKED BY	APPROVED BY	DATE		DATE	
kanyonga / king'ori	Prof. Luti				13-Feb-12	

The Stirling Engine

links 2 off

ISSUE

SHEET 20 / 24

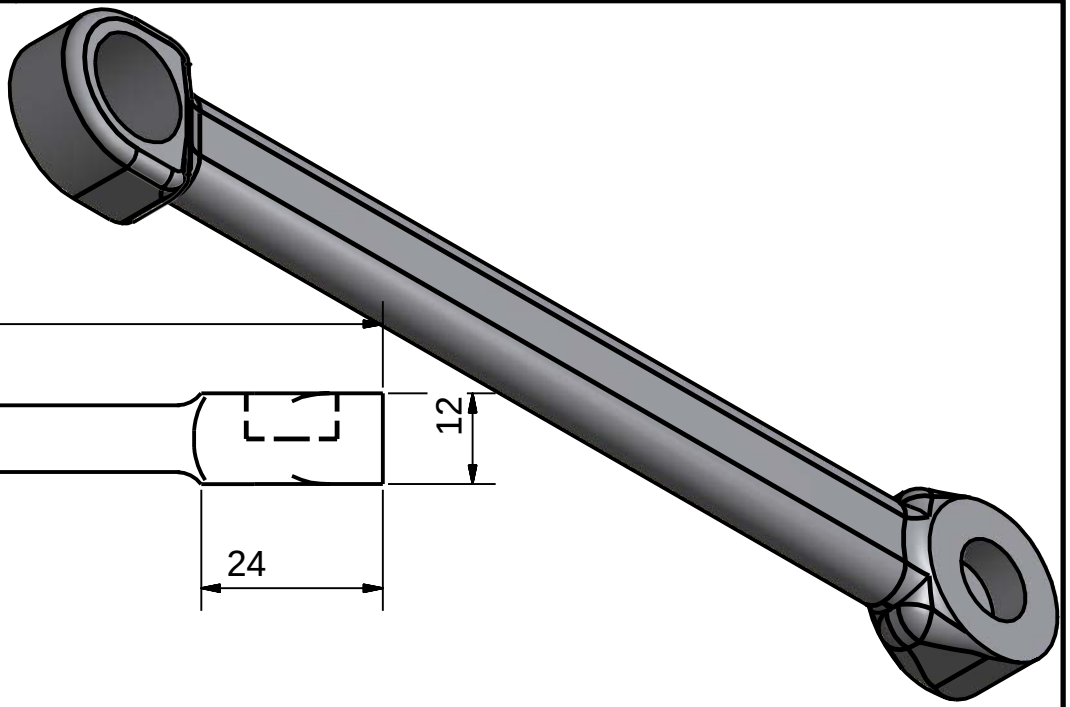

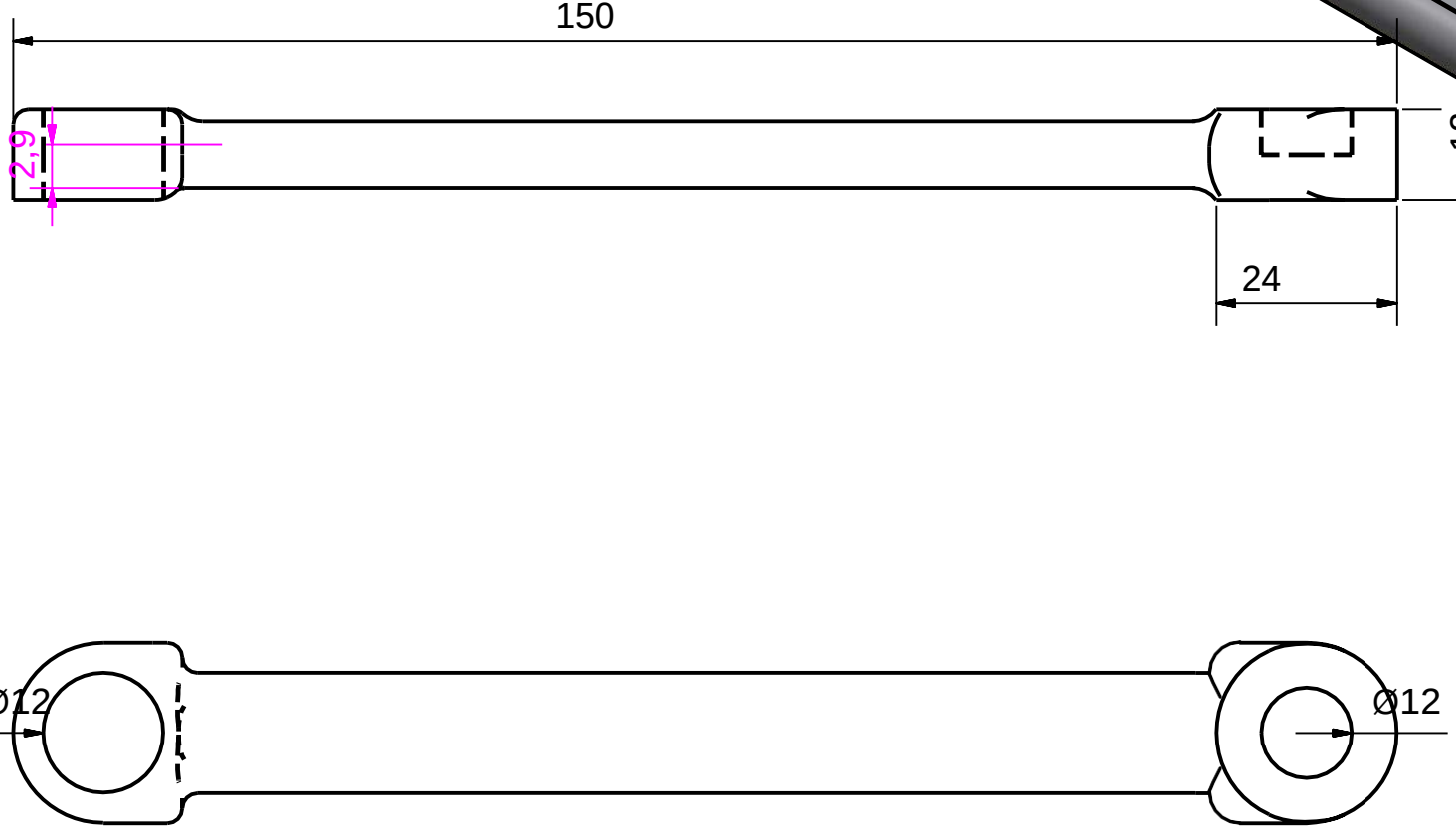

DESIGNED BY	CHECKED BY	APPROVED BY	DATE		DATE	
kanyonga / king'ori	Prof. Luti				13-Feb-12	

The Stirling Engine

power connecting rod

ISSUE	SHEET
	21 / 24

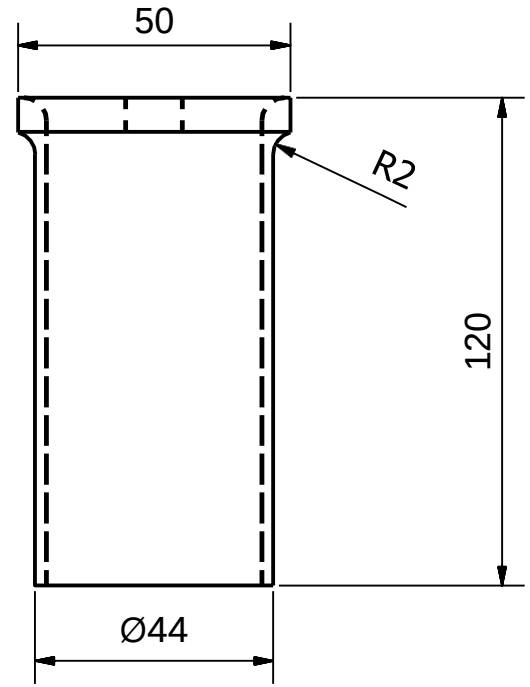

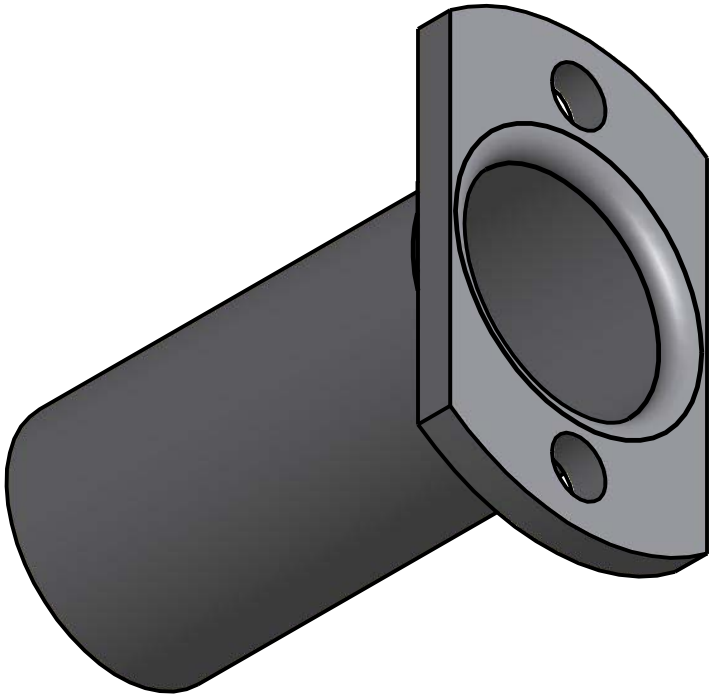

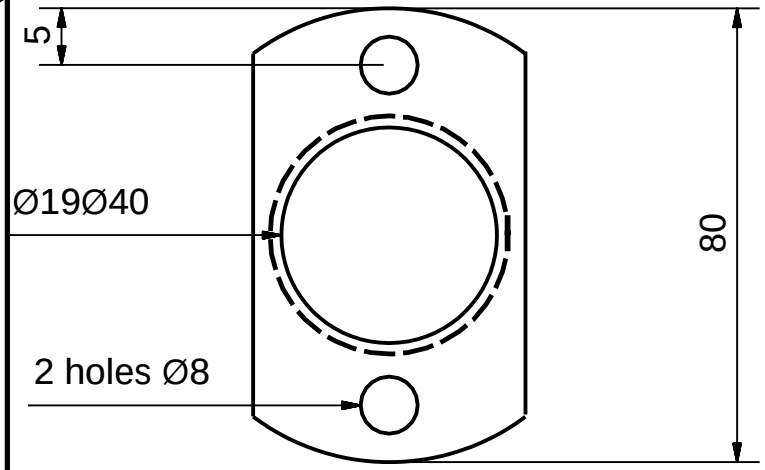

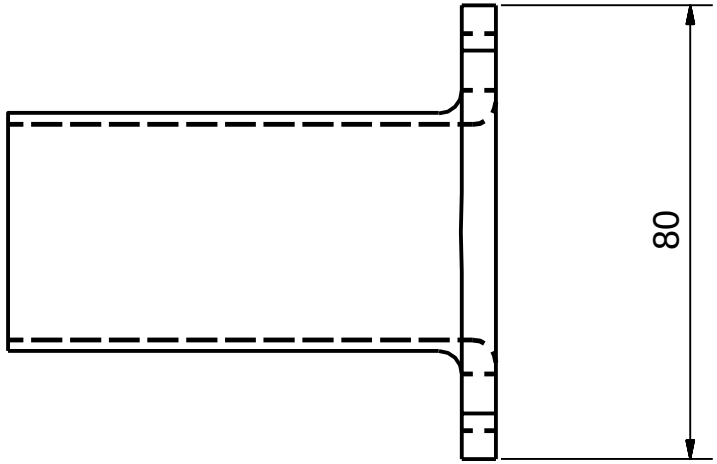

DESIGNED BY	CHECKED BY	APPROVED BY	DATE		DATE	
kanyonga / king'ori	Prof. Luti				13-Feb-12	

The Stirling Engine

power cylinder	ISSUE	SHEET
		22 / 24

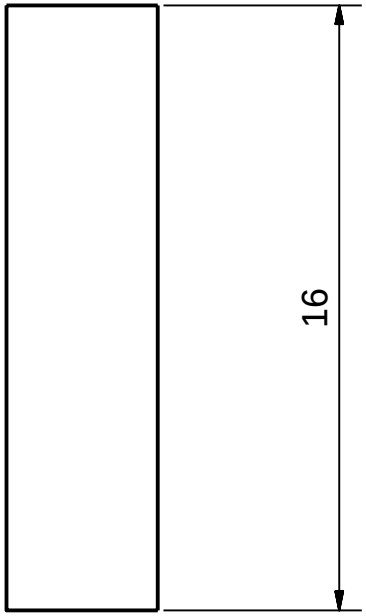

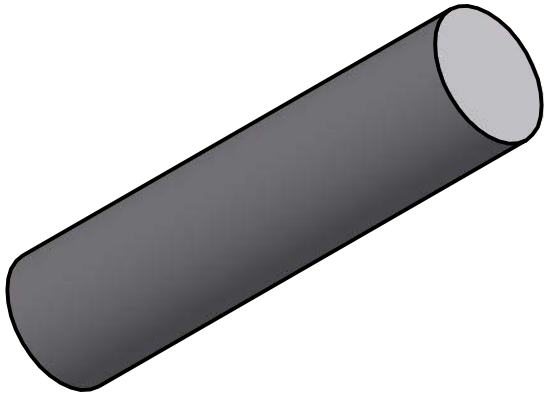

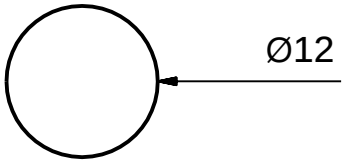

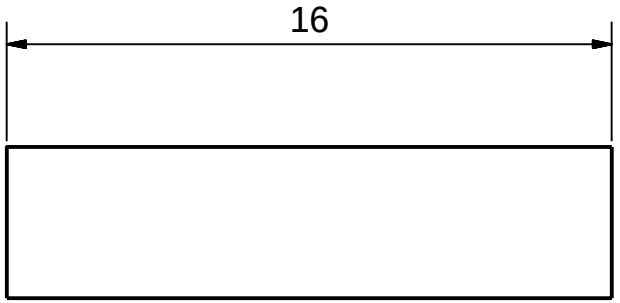

DESIGNED BY	CHECKED BY	APPROVED BY	DATE		DATE	
kanyonga / king'ori	Prof. Luti				13-Feb-12	

The Stirling Engine

power pin

ISSUE	SHEET
	23 / 24

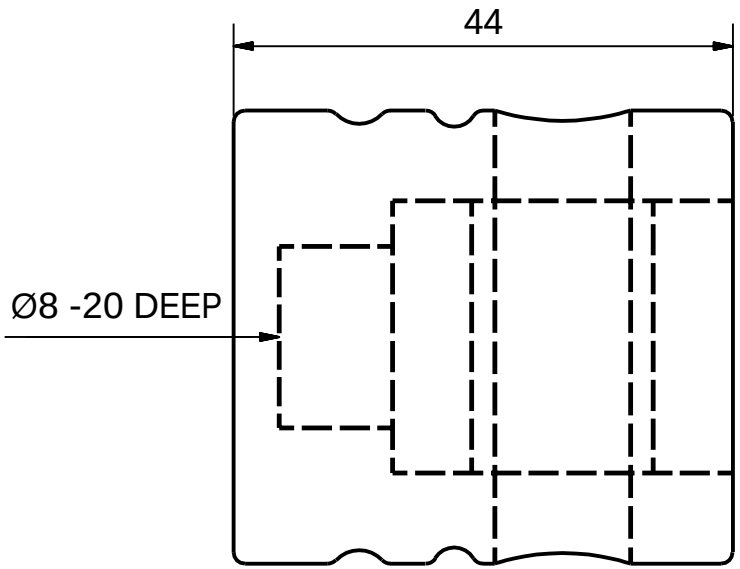

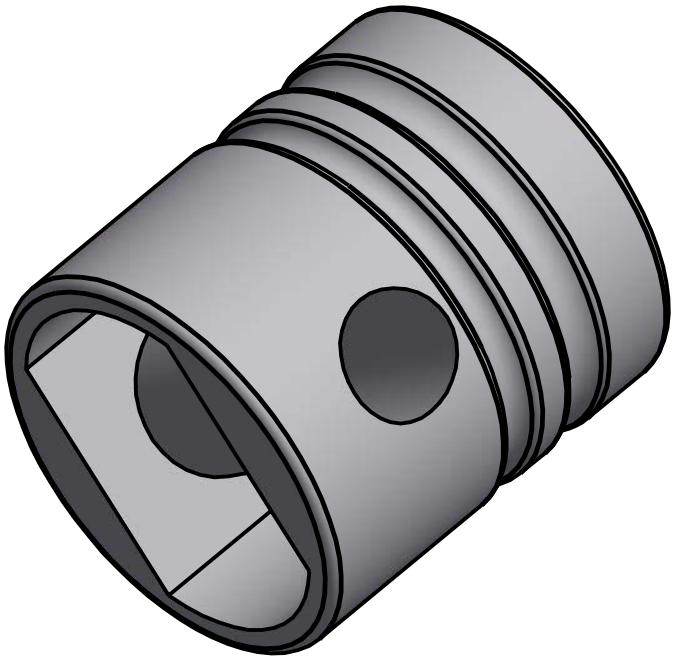

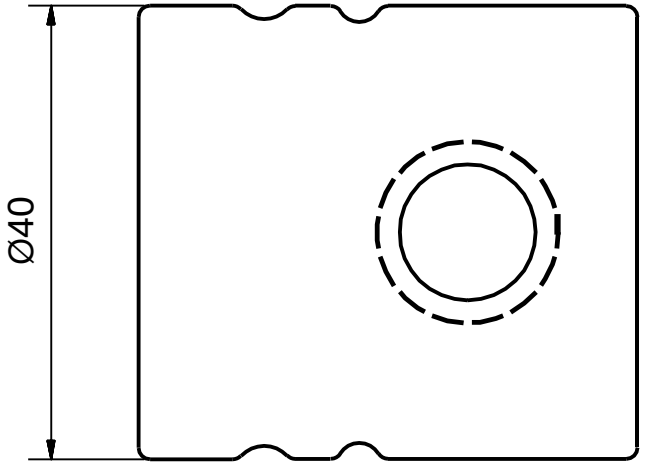

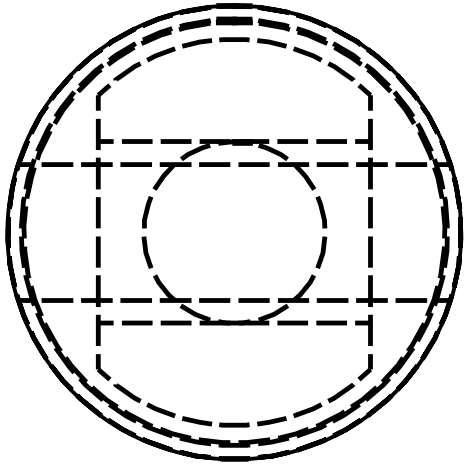

DESIGNED BY	CHECKED BY	APPROVED BY DATE		DATE	
kanyonga / king'ori	Prof. Luti			13-Feb-12	

The Stirling Engine

piston	ISSUE	SHEET
		24 / 24

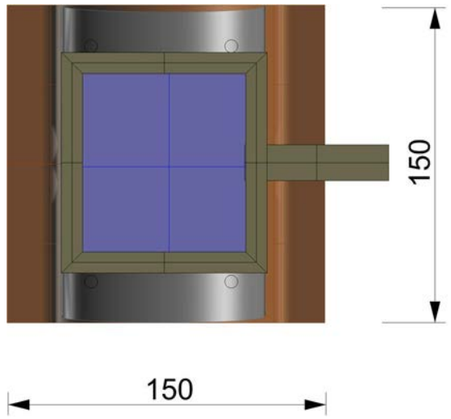

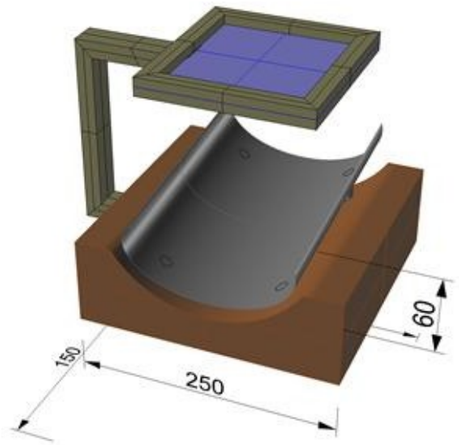

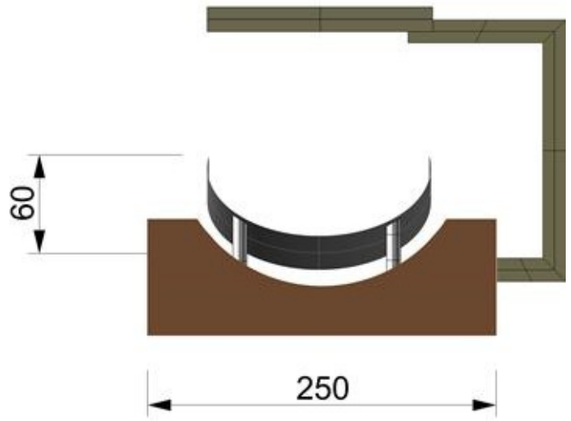

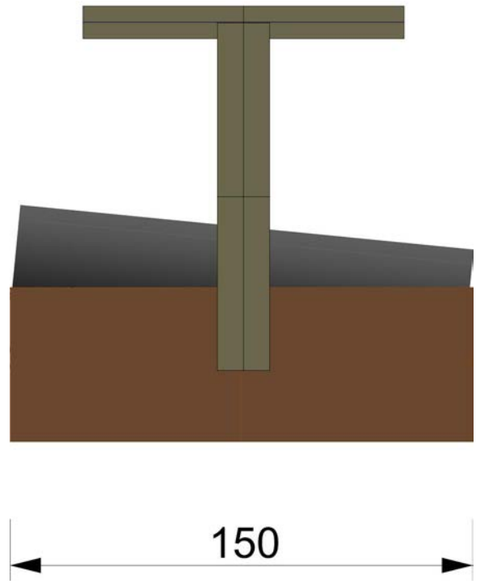

Designed by	Checked by	Approved by	Date		Date	
Kanyonga/Kingori	Prof. Luti		2/13/2012		2/13/2012	

The striling Engine project

Solar Concentrator

Edition

Sheet 1 / 1

APPENDIX B BILL OF QUANTITIES

	PART	MATERIAL	DIMENSIONS (MM)	QTY	COST
1	Base	Wood	300mm by 200mm	1	-
2	Base support	Rubber		4	500
3	Plate 1	Mild steel	2sq feet, 3mm thick	1	500
4	Plate 2	Mild steel	2sq feet, 2mm thick	1	500
5	Displacer Cylinder	Mild steel	Dia=52mm pipe; L=500mm	1	500
6	Displacer	Wood	L=75mm; Dia=40mm	1	-
7	Silicon sealant			1	700
8	Nuts, bolts and rivets		M8	20	600
9	Fly Wheel plate	Mild steel	1sq feet, 6mm thick	1	500
10	Insulation	Air and oil Gasket	2sq feet Sheet	1	700
11	Flywheel support rod and bush	Mild steel	3” 2 foot Rod	1	1000
12	Power con Rod	Mild steel	2” 1 foot Rod	1	500
13	Power Cylinder (inclusive of machining)	Cast iron	40mm internal diameter	1	4,000
14	Power Piston and oil rings (for 50cc Motor bike)	Aluminum	40mm diameter	1	2,500
15	Concentrator	Aluminium Sheet	2ft X 5M	1	500
16	Labour				2000
17	Miscellaneous				1,000
	Total				**Ksh16,000**

APPENDIX C ILLUSTRATIONS

Figure 5.1: Stirling Engine Technology being made use of in California

Sr. No. Swarnim/RO/Utilization/2022/16 **Date:** 10/03/2022

Statement of Expenditure/Utilization certificate

This is to certify that the research project sanctioned to **Prof. Lakhi Niraj Gareja, Swarrnim Institute of Technology, Swarrnim Startup and Innovation University, Gandhinagar, Gujarat,** in the academic year 2019-20 has been utilized as per the following details:

Title of Project	Amount Sanctioned in (Rs)	Amount disbursed in (Rs)		Actual Expenditure in (Rs)
		2019-2020	2021-2022	
Hybrid Stirling engine	1200000	703050	481500	1184550

SWARRNIM STARTUP & INNOVATION UNIVERSITY ACCOUNT SECTION

Accounts/Finance officer

Swarrnim Startup and Innovation University